www.wilwood.com

ASSEMBLY INSTRUCTIONS

FOR

1999 - 2011 GMC TRUCK / SUV 1500 SERIES*

***For additional vehicle compatibility, visit www.wilwood.com**

AEROLITE 6R FRONT BRAKE KIT, WITH 14.25” DIAMETER VENTED ROTOR

This kit will not fit vehicles equipped with aluminum spindles (uprights) and will only work with cast iron spindles. Please check your vehicle spindles before ordering or attempting installation

BASE PART NUMBER

140-9789

DISC BRAKES SHOULD ONLY BE INSTALLED BY SOMEONE EXPERIENCED AND COMPETENT IN THE INSTALLATION AND MAINTENANCE OF DISC BRAKES

READ ALL WARNINGS

WARNING

IT IS THE RESPONSIBILITY OF THE PERSON INSTALLING ANY BRAKE COMPONENT OR KIT TO DETERMINE THE SUITABILITY OF THE COMPONENT OR KIT FOR THAT PARTICULAR APPLICATION. IF YOU ARE NOT SURE HOW TO SAFELY USE THIS BRAKE COMPONENT OR KIT, YOU SHOULD NOT INSTALL OR USE IT. DO NOT ASSUME ANYTHING. IMPROPERLY INSTALLED OR MAINTAINED BRAKES ARE DANGEROUS. IF YOU ARE NOT SURE, GET HELP OR RETURN THE PRODUCT. YOU MAY OBTAIN ADDITIONAL INFORMATION AND TECHNICAL SUPPORT BY CALLING WILWOOD AT (805) 388-1188, OR VISIT OUR WEB SITE AT WWW.WILWOOD.COM. USE OF WILWOOD TECHNICAL SUPPORT DOES NOT GUARANTEE PROPER INSTALLATION. **YOU**, OR THE PERSON WHO DOES THE INSTALLATION MUST KNOW HOW TO PROPERLY USE THIS PRODUCT. IT IS NOT POSSIBLE OVER THE PHONE TO UNDERSTAND OR FORESEE ALL THE ISSUES THAT MIGHT ARISE IN YOUR INSTALLATION.

RACING EQUIPMENT AND BRAKES MUST BE MAINTAINED AND SHOULD BE CHECKED REGULARLY FOR FATIGUE, DAMAGE, AND WEAR.

Need Additional Information? Use Your SmartPhone and Jump to Our Technical Tips Section on Our Web Site.

wilwood DISC BRAKES

WARNING

DO NOT OPERATE ANY VEHICLE ON UNTESTED BRAKES!

SEE MINIMUM TEST PROCEDURE WITHIN

ALWAYS UTILIZE SAFETY RESTRAINT SYSTEMS AND ALL OTHER AVAILABLE SAFETY EQUIPMENT WHILE OPERATING THE VEHICLE

IMPORTANT • READ THE DISCLAIMER OF WARRANTY INCLUDED IN THE KIT

NOTE: Some cleaners may stain or remove the finish on brake system components. Test the cleaner on a hidden portion of the component before general use.

Important Notice - Read This First

Before any tear-down or disassembly begins, review the following information:

- **Review the wheel clearance diagram (figure 2, page 3) to verify that there is adequate clearance with the wheels you will be using with the installation.**
- **This brake kit does not include flex lines. OEM brake lines will not adapt to Wilwood calipers. Check the assembly instructions, or associated components section for brake line recommendations before assembly. In addition, Wilwood offers an extensive listing of brake lines and fittings on our web site: www.wilwood.com.**
- **Due to OEM production differences and other variations from vehicle to vehicle, the fastener hardware and other components in this kit may not be suitable for a specific application or vehicle.**
- **It is the responsibility of the purchaser and installer of this kit to verify suitability / fitment of all components and ensure all fasteners and hardware achieve complete and proper engagement. Improper or inadequate engagement can lead to component failure.**
- **2007 - present spindles may require light machining with a grinder to smooth parting line edge at original caliper mount ears in order for the Wilwood caliper bracket to fit. Please see figure 4, plage 3 for instructions. Before assembly, examine the necessity of this modification by inspecting the spindle and bracket interface and your ability to perform this modification before assembling any parts.**

Photographic Tip

Important and highly recommended: Take photos of brake system before disassembly and during the disassembly process. In the event, trouble-shooting photos can be life savers. Many vehicles have undocumented variations, photos will make it much simpler for Wilwood to assist you if you have a problem.

Exploded Assembly Diagram

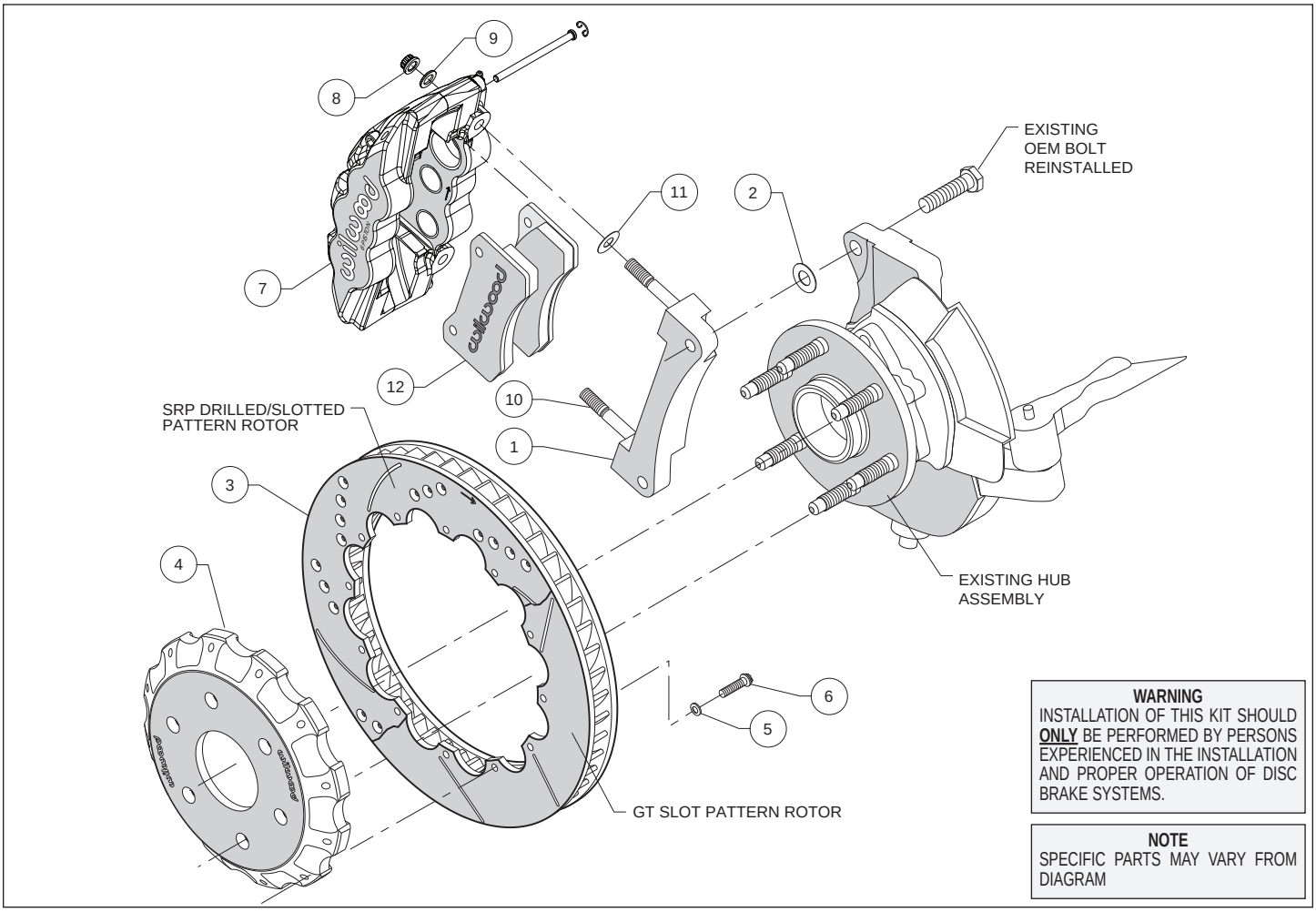

Figure 1. Typical Installation Configuration

Parts List

ITEM NO.	PART NO.	DESCRIPTION	QTY
1	250-9888	Bracket, Caliper Mounting	2
2	240-8969	Shim, .029 Thick	16
3	160-9787/88-GTB	Rotor, SV-GT 1.25” X 14.25” Dia, 12 x 9.19” Bolt Circle (one each, right and left)	2
3A	160-9762/63	Rotor, SRP Drilled and Slotted (one each, right and left)	2
4	170-9891	Hat, 6 x 5.50, .813 Offset, 12 x 9.19 Bolt Circle	2
5	240-11240	Washer, .265 I.D. x.500 O.D. x .063 Thick	24
6	230-6738	Bolt, 1/4-28 x .75 Long, 12 Point	24
7	120-13293/94-BK	Caliper, Aerolite 6R (one each, right and left)	2
7A	120-13293/94-RD	Caliper, Aerolite 6R, Red (one each, left and right)	2
8	230-9182	Nut, 7/16-20, Self-Locking, 12 Point	4
9	240-11101	Washer, .453 I.D. x .750 O.D. x .063 Thick	4
10	230-9080	Stud, 7/16-14 x 7/16-20 x 3.375 long (pre installed in bracket)	4
11	240-3902	Shim, .016 Thick	16
12	150-9488K	Pad, BP-10, Axle Set	1

NOTES: Part Number 230-8217 Rotor Bolt Kit, includes P/N 230-6738 and 240-11240
Part Number 250-9898 Caliper Bracket Kit, includes P/N 230-9080, 230-9182, 240-3902, 240-8969, 240-11101 & 250-9888
Item 3A is an optional item and is included with the “-”D” drilled rotor kits. Add “-D” to end of part number when ordering.
Item 7A is an optional item and is included with the “-R” red caliper kits. Add “-R” to end of part number when ordering.
Wilwood offers an optional Braided Stainless Steel Hose Kit. Order part number 220-8998 (1999-2006), or part number 220-10979 (2007-2011) (neither line included in kit).

General Information and Disassembly Instructions

•*Installation of this kit should **ONLY** be performed by individuals experienced in the installation and proper operation of disc brake systems.* Prior to any attempt to install this kit, please check the following to ensure a trouble free installation.

•Inspect the contents of this kit against the parts list to ensure that all components and hardware are included.

•Make sure this is the correct kit to fit the exact make and model year of your axle. This kit is designed for direct bolt-on installation to 1999 through present model year GM Truck / SUV 1500 Series hubs.

•Verify your wheel clearance using Figure 2.

•Verify that the factory axle and stud pattern matches the stud hole pattern in the rotors supplied with this kit. Axles that have been modified with different size studs or lug patterns may require modifications to the rotor that must be performed by a qualified machinist.

Disassembly

•Disassemble the original equipment front brakes: Raise the front wheels off the ground and support the front suspension according to the vehicle manufacturer’s instructions.

•Remove the wheel. Remove the two bolts that hold the stock caliper mounting bracket to the spindle. Lift off the bracket and stock caliper as one unit, then slide off the stock hat and rotor assembly. On some models you may have to unbolt the stock caliper from the caliper bracket before removal

•Thoroughly clean and de-grease the spindles while removing any nicks or burrs.

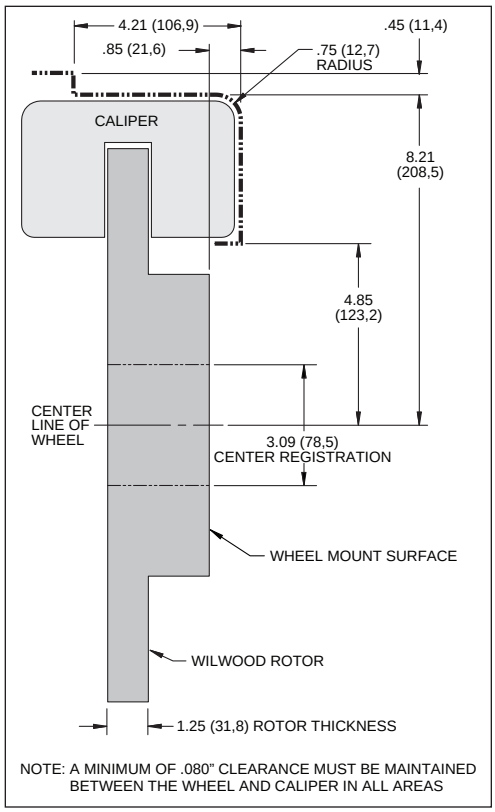

Figure 2. Wheel Clearance Diagram

Assembly Instructions

Assembly Instructions (numbers in parenthesis refer to the part list/diagram on the preceding page):

•The caliper mount bracket assembly (1) should be installed first with clean, dry threads on the mounting bolts. Install the bracket on the outboard side of the spindle by sliding the original OEM bolt through the OEM mounting ear bolt hole from the backside, through washer (2) and into the bracket (1). The bracket must tighten squarely against the outboard side of the caliper mount bosses on the spindle. Inspect for interference from casting irregularities, machining ridges, burrs, etc. Use one thin shim (2) between the bracket and spindle during initial trial fitting.

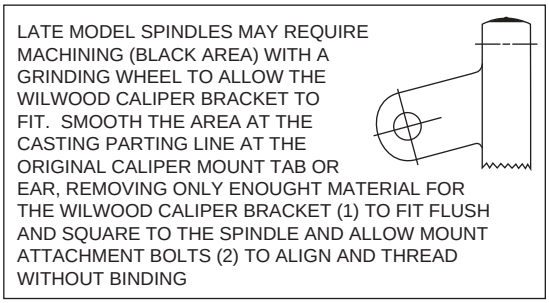

Figure 3. Machining Diagram

•With the larger I.D. side of the rotor (3) facing away from the hat (4), bolt rotor (3) to hat (4) through the backside of the rotor using washers (5) and bolts (6). Using an alternating sequence, apply red *Loctite*® 271 to the threads and torque bolts to 140 **in-lb.** For an added measure of security, the bolts may be safety wired using standard 0.032 inch diameter stainless steel safety wire as shown in Figure 4. Please refer to Wilwood's data sheet DS-386 (available at www.wilwood.com/Pdf/DataSheets/ds386.pdf) for complete safety wire installation instructions.

•Install the hat and rotor assembly onto the spindle. Check to be sure the hat seats squarely against the hub. The hub must be free from any rust, debris, casting burrs, machining irregularities, etc. Use several lug nuts to hold the rotor and hat firmly against the hub during the next phases of the installation and clearance checking procedures.

•Install one shim (11) over each stud (10) on the radial mount bracket (1). Slide the caliper (7) in place over the studs and rotor and install the washer (9) and lock nut (8) to hold the caliper in place. The caliper bleed screws should be pointing up. Snug the lock nuts (8) and check that the rotor (3) is centered in the caliper (7). Add or subtract .029" shims (2) as necessary between the caliper mount bracket (1) and the caliper mount bosses on the spindle to center the caliper (7).

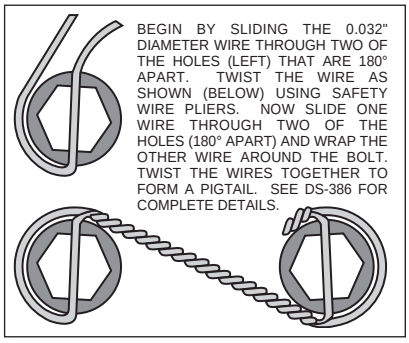

Figure 4. Safety Wire Diagram

• Remove the two pad retaining pins from the caliper (7) by carefully popping out the pin retaining clips and sliding out the pins. Insert the brake pads (12) into the caliper from the bottom, Figure 1. With the friction material facing the rotor, secure the brake pads in place with the pad retaining pins and clips. Reinstall the caliper onto the caliper mounting bracket and temporarily tighten the lock nuts. Check that the top of the brake pad is flush with the outside diameter of the rotor. If not, adjust by adding or subtracting shims (11) between the caliper and the bracket.

•Remove the lug nuts that were holding the hat/rotor in place. Install the wheel and torque the lug nuts to manufacturer's specification. Check to see that the wheel rotates freely without interference.

•Once all clearances have been checked, remove the wheel, caliper and rotor from the spindle and hub. Secure the caliper mounting bracket (1) to the spindle using red *Loctite*® 271 on the bolt threads. Torque the bolts to manufacturer's specifications. Reinstall the rotor and again use several lug nuts to hold it in place. Lubricate caliper mounting studs and nuts with lightweight oil, reinstall the caliper, torque the caliper nuts (8) to 47 ft-lbs.

•***NOTE**: OEM rubber brake hoses generally cannot be adapted to Wilwood calipers. The caliper inlet fitting is a 1/8-27 NPT.* The preferred method is to use steel adapter fittings at the caliper, either straight, 45 or 90 degree and enough steel braided line to allow for full suspension travel and turning radius, lock to lock. **Carefully route lines to prevent contact with moving suspension, brake or wheel components.** Wilwood hose kits are designed for use in many different vehicle applications and it is the installer's responsibility to properly route and ensure adequate clearance and retention for brake hose components. Wilwood offers a hose kit, P/N 220-8998 (1999-2006) and P/N 220-10979 (2007-2011), which includes hoses, fittings, etc., all in one package for this application.

•Specified brake hose kits may not work with all Years, Makes and Models of vehicle that this brake kit is applicable to, due to possible OEM manufacturing changes during a production vehicle's life. It is the installer's responsibility to ensure that all fittings and hoses are the correct size and length, to ensure proper sealing and that they will not be subject to crimping, strain and abrasion from vibration or interference with suspension components, brake rotor or wheel.

Assembly Instructions (Continued)

•In absence of specific instructions for brake line routing, the installer must use his best professional judgment on correct routing and retention of lines to ensure safe operation. Test vehicle brake system per the 'minimum test' procedure stated within this document before driving. After road testing, inspect for leaks and interference. Initially after install and testing, perform frequent checks of the vehicle brake system and lines before driving, to confirm that there is no undue wear or interference not apparent from the initial test. Afterwards, perform periodic inspections for function, leaks and wear in a interval relative to the usage of vehicle.

•Repeat this entire procedure for the other wheel.

• Bleed the brake system. Reference the general information and recommendations below for proper bleeding instructions.

• Remove the lug nuts that were used to hold the hat/rotor assembly in place during caliper installation. Install the wheel and torque the lug nuts to OEM specifications.

Additional Information and Recommendations

•***NOTE:*** *With the installation of after market disc brakes, the wheel track may change depending on the application.* Check your wheel offset before final assembly.

•Please read the following concerning balancing the brake bias on 4 wheel disc vehicles.

This GM Truck kit can be operated using the stock OEM master cylinder. However, as with most suspension and tire modifications (from OEM specifications), changing the brakes may alter the front to rear brake bias. Rear brakes should not lock up before the front. Brake system evaluation and tests should be performed by persons experienced in the installation and proper operation of brake systems. Evaluation and tests should be performed under controlled conditions. Start by making several stops from low speeds then gradually work up to higher speeds. Always utilize safety restraint systems while operating vehicle.

•For optimum performance, fill and bleed the new system with Wilwood Hi-Temp° 570 grade fluid or EXP 600 Plus. For severe braking or sustained high heat operation, use Wilwood EXP 600 Plus Racing Brake Fluid. Used fluid must be completely flushed from the system to prevent contamination. ***NOTE:*** *Silicone DOT 5 brake fluid is* ***NOT*** *recommended for racing or performance driving*.

•To properly bleed the brake system, begin with the caliper farthest from the master cylinder. Bleed the outboard bleed screw first, then the inboard. Repeat the procedure until all calipers in the system are bled, ending with the caliper closest to the master cylinder. If the caliper is fitted with bleed screws on four corners, make sure the bottom bleed screws are tight. Only bleed from the top bleed screws. ***NOTE:*** *When using a new master cylinder, it is important to bench bleed the master cylinder first.*

•Test the brake pedal. It should be firm, not spongy, and stop at least 1 inch from the floor under heavy load.

If the brake pedal is spongy, bleed the system again.

If the brake pedal is initially firm, but then sinks to the floor, check the system for leaks. Correct the leaks (if applicable) and then bleed the system again.

If the brake pedal goes to the floor and continued bleeding of the system does not correct the problem, either air may be trapped in the system, or a master cylinder with increased capacity (larger bore diameter) may be required. Wilwood offers various lightweight master cylinders with large fluid displacement capacities (custom fabricated mounting may be required).

Brake Testing

WARNING • DO NOT DRIVE ON UNTESTED BRAKES
BRAKES MUST BE TESTED AFTER INSTALLATION OR MAINTENANCE
MINIMUM TEST PROCEDURE

- Make sure pedal is firm: Hold firm pressure on pedal for several minutes, it should remain in position without sinking. If pedal sinks toward floor, check system for fluid leaks. DO NOT drive vehicle if pedal does not stay firm or can be pushed to the floor with normal pressure.
- At very low speed (2-5 mph) apply brakes hard several times while turning steering from full left to full right, repeat several times. Remove the wheels and check that components are not touching, rubbing, or leaking.
- Carefully examine all brake components, brake lines, and fittings for leaks and interference.
- Make sure there is no interference with wheels or suspension components.
- Drive vehicle at low speed (15-20 mph) making moderate and hard stops. Brakes should feel normal and positive. Again check for leaks and interference.
- Always test vehicle in a safe place where there is no danger to (or from) other people or vehicles.
- Always wear seat belts and make use of all safety equipment.

Pad and Rotor Bedding

BEDDING STEPS FOR NEW PADS AND ROTORS – ALL COMPOUNDS

Once the brake system has been tested and determined safe to operate the vehicle, follow these steps for the bedding of all new pad materials and rotors. These procedures should only be performed on a race track, or other safe location where you can safely and legally obtain speeds up to 65 MPH, while also being able to rapidly decelerate.

- Begin with a series of light decelerations to gradually build some heat in the brakes. Use an on-and-off the pedal technique by applying the brakes for 3-5 seconds, and then allow them to fully release for a period roughly twice as long as the deceleration cycle. If you use a 5 count during the deceleration interval, use a 10 count during the release to allow the heat to sink into the pads and rotors.
- After several cycles of light stops to begin warming the brakes, proceed with a series of medium to firm deceleration stops to continue raising the temperature level in the brakes.
- Finish the bedding cycle with a series of 8-10 hard decelerations from 55-65 MPH down to 25 MPH while allowing a proportionate release and heat-sinking interval between each stop. The pads should now be providing positive and consistent response.
- If any amount of brake fade is observed during the bed-in cycle, immediately begin the cool down cycle.
- Drive at a moderate cruising speed, with the least amount of brake contact possible, until most of the heat has dissipated from the brakes. Avoid sitting stopped with the brake pedal depressed to hold the car in place during this time. Park the vehicle and allow the brakes to cool to ambient air temperature.

COMPETITION VEHICLES

- If your race car is equipped with brake cooling ducts, blocking them will allow the pads and rotors to warm up quicker and speed up the bedding process.
- Temperature indicating paint on the rotor and pad edges can provide valuable data regarding observed temperatures during the bedding process and subsequent on-track sessions. This information can be highly beneficial when evaluating pad compounds and cooling efficiencies.

Pad and Rotor Bedding (Continued)

POST-BEDDING INSPECTION – ALL VEHICLES

- After the bedding cycle, the rotors should exhibit a uniformly burnished finish across the entire contact face. Any surface irregularities that appear as smearing or splotching on the rotor faces can be an indication that the brakes were brought up to temperature too quickly during the bedding cycle. If the smear doesn't blend away after the next run-in cycle, or if chatter under braking results, sanding or resurfacing the rotors will be required to restore a uniform surface for pad contact.

PRE-RACE WARM UP

- Always make every effort to get heat into the brakes prior to each event. Use an on-and-off the pedal practice to warm the brakes during the trip to the staging zone, during parade laps before the flag drops, and every other opportunity in an effort to build heat in the pads and rotors. This will help to ensure best consistency, performance, and durability from your brakes.

DYNO BEDDED COMPETITION PADS AND ROTORS

- Getting track time for a proper pad and rotor bedding session can be difficult. Wilwood offers factory dyno-bedded pads and rotors on many of our popular competition pads and ***Spec 37*** GT series rotors. Dyno-bedded parts are ready to race on their first warm up cycle. This can save valuable time and effort when on-track time is either too valuable or not available at all, Dyno-bedding assures that your pads and rotors have been properly run-in and are ready to go. Contact your dealer or the factory for more information on Wilwood Dyno-Bedding services.

NOTE:

NEVER allow the contact surfaces of the pads or rotors to be contaminated with brake fluid. Always use a catch bottle with a hose to prevent fluid spill during all brake bleeding procedures.

Connect with Wilwood

Wilwood Facebook Wilwood Twitter Wilwood YouTube

Associated Components

PART NO.	DESCRIPTION
260-13706	Wilwood Residual Pressure Valve (2 lb for disc brakes)
260-13707	Wilwood Residual Pressure Valve (10 lb for drum brakes)
260-8419	Wilwood Proportioning Valve
290-0632	Wilwood Racing Brake Fluid (Hi-Temp° 570) (12 oz)
290-6209	Wilwood Racing Brake Fluid (EXP 600 Plus) (16.9 oz)
340-1285	Wilwood Floor Mount Brake Pedal (with balance bar)
340-1287	Wilwood Swing Mount Brake Pedal (with balance bar)
260-6764	Wilwood 3/4 inch High Volume Aluminum Master Cylinder
260-6765	Wilwood 7/8 inch High Volume Aluminum Master Cylinder
260-6766	Wilwood 1 inch High Volume Aluminum Master Cylinder
260-4893	1-1/16 inch Tandem Master Cylinder (aluminum housing)
250-2406	Mounting Bracket Kit (tandem master cylinder)
260-8555	Wilwood 1 inch Aluminum Tandem Chamber Master Cylinder
260-8556	Wilwood 1-1/8 inch Aluminum Tandem Chamber Master Cylinder
350-2038	1971 - 1973 Pinto Rack and Pinion (new, not rebuilt)
270-2016	Quick Release Steering Hub (3/4 inch shaft)
270-2017	Quick Release Steering Hub (5/8 inch shaft)
220-8998	Flexline Kit, GMC Truck / SUV 1500 Series, Front 1999-2006
220-10979	Flexline Kit, GMC Truck / SUV 1500 Series, Front 2007-2011