www.wilwood.com

ASSEMBLY INSTRUCTIONS

FOR

1955 - 1957 CHEVROLET*

***For additional vehicle compatibility, visit www.wilwood.com**

DYNALITE FRONT BRAKE KIT (LESS BRACKETS) WITH 12.19” DIAMETER VENTED ROTOR

BASE PART NUMBER

140-13199

DISC BRAKES SHOULD ONLY BE INSTALLED BY SOMEONE EXPERIENCED AND COMPETENT IN THE INSTALLATION AND MAINTENANCE OF DISC BRAKES

READ ALL WARNINGS

WARNING

IT IS THE RESPONSIBILITY OF THE PERSON INSTALLING ANY BRAKE COMPONENT OR KIT TO DETERMINE THE SUITABILITY OF THE COMPONENT OR KIT FOR THAT PARTICULAR APPLICATION. IF YOU ARE NOT SURE HOW TO SAFELY USE THIS BRAKE COMPONENT OR KIT, YOU SHOULD NOT INSTALL OR USE IT. DO NOT ASSUME ANYTHING. IMPROPERLY INSTALLED OR MAINTAINED BRAKES ARE DANGEROUS. IF YOU ARE NOT SURE, GET HELP OR RETURN THE PRODUCT. YOU MAY OBTAIN ADDITIONAL INFORMATION AND TECHNICAL SUPPORT BY CALLING WILWOOD AT (805) 388-1188, OR VISIT OUR WEB SITE AT WWW.WILWOOD.COM. USE OF WILWOOD TECHNICAL SUPPORT DOES NOT GUARANTEE PROPER INSTALLATION. **YOU**, OR THE PERSON WHO DOES THE INSTALLATION MUST KNOW HOW TO PROPERLY USE THIS PRODUCT. IT IS NOT POSSIBLE OVER THE PHONE TO UNDERSTAND OR FORESEE ALL THE ISSUES THAT MIGHT ARISE IN YOUR INSTALLATION.

RACING EQUIPMENT AND BRAKES MUST BE MAINTAINED AND SHOULD BE CHECKED REGULARLY FOR FATIGUE, DAMAGE, AND WEAR.

Need Additional Information? Use Your SmartPhone and Jump to Our Technical Tips Section on Our Web Site.

WARNING

DO NOT OPERATE ANY VEHICLE ON UNTESTED BRAKES!

SEE MINIMUM TEST PROCEDURE WITHIN

ALWAYS UTILIZE SAFETY RESTRAINT SYSTEMS AND ALL OTHER AVAILABLE SAFETY EQUIPMENT WHILE OPERATING THE VEHICLE

IMPORTANT • READ THE DISCLAIMER OF WARRANTY INCLUDED IN THE KIT

NOTE: Some cleaners may stain or remove the finish on brake system components. Test the cleaner on a hidden portion of the component before general use.

Important Notice - Read This First

Before any tear-down or disassembly begins, review the following information:

- **Review the wheel clearance diagram (Figure 2, page 3) to verify that there is adequate clearance with the wheels you will be using with the installation.**
- **Front brake kits do not include flex lines. OEM brake lines will not adapt to Wilwood calipers. Check the assembly instructions, or associated components section for brake line recommendations before assembly. In addition, Wilwood offers an extensive listing of brake lines and fittings on our web site: www.wilwood.com.**
- **Due to OEM production differences and other variations from vehicle to vehicle, the fastener hardware and other components in this kit may not be suitable for a specific application or vehicle.**
- **It is the responsibility of the purchaser and installer of this kit to verify suitability / fitment of all components and ensure all fasteners and hardware achieve complete and proper engagement. Improper or inadequate engagement can lead to component failure.**

Photographic Tip

Important and highly recommended: Take photos of brake system before disassembly and during the disassembly process. In the event, trouble-shooting photos can be life savers. Many vehicles have undocumented variations, photos will make it much simpler for Wilwood to assist you if you have a problem.

Exploded Assembly Diagram

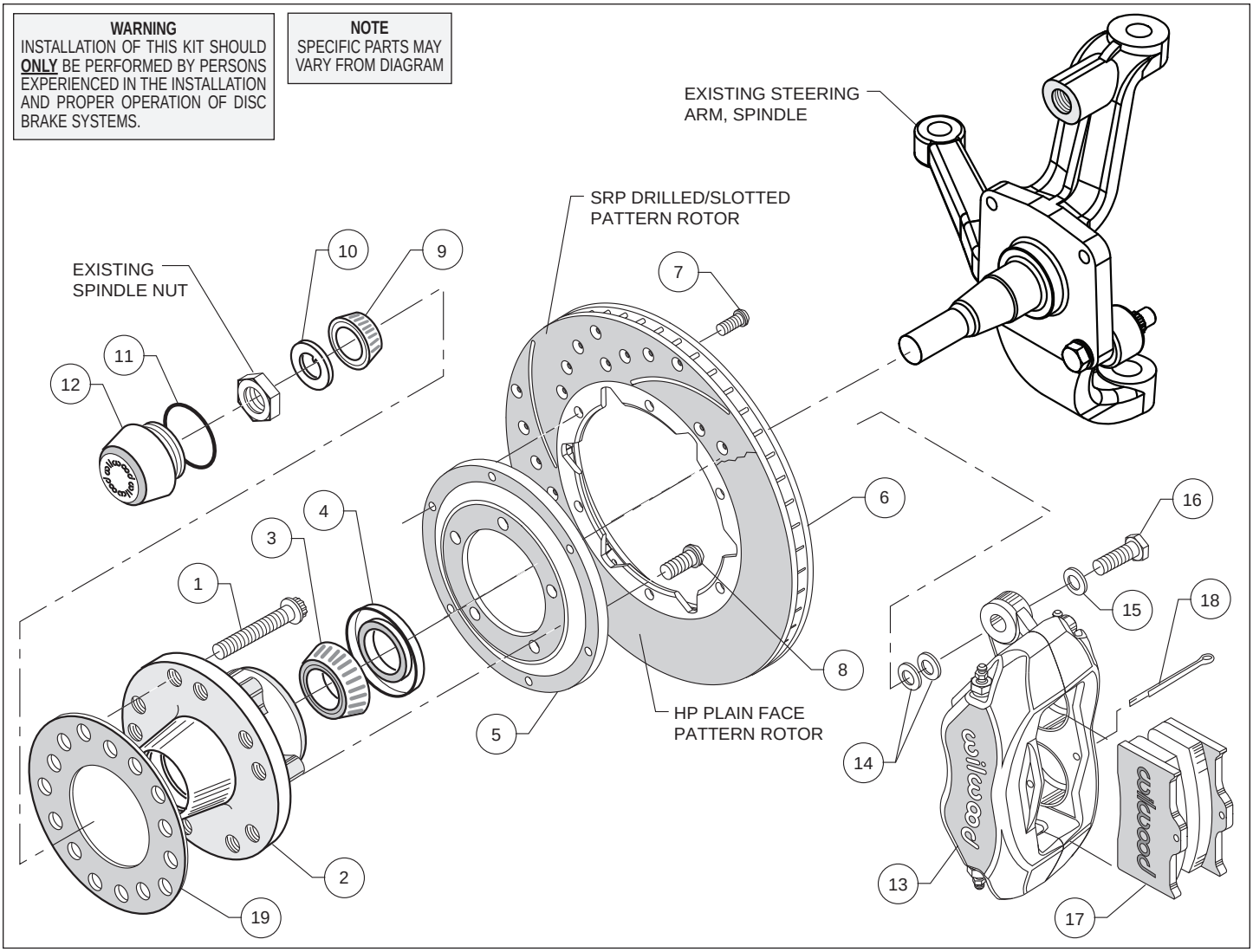

Figure 1. Typical Installation Configuration

Parts List

ITEM NO.	PART NO.	DESCRIPTION	QTY
1	230-2187	Stud, Wheel, 1/2-20 x 1.75 Long, 12 Point	10
2	270-11032	Hub Assembly	2
3	370-0879	Cone, Inner Bearing	2
4	380-0928	Seal, Grease	2
5	300-3099	Adapter, Rotor	2
6	160-5843	Rotor, .81” Thk x 12.19” Dia, 8 x 7.00” Bolt Circle	2
6A	160-7103/7104-BK	Rotor, Drilled and Slotted (pair, one each, left and right)	2
7	230-11934	Bolt, 5/16-18 x 0.75 Long, Torx Button Head	16
8	230-11239	Bolt, 3/8-16 x 1.00 Long, Torx Button Head	10
9	370-0877	Cone, Outer Bearing	2
10	240-2283	Washer, Spindle, 3/4	2
11	211-1674	O-ring	2
12	270-2158	Cap, Dust	2
13	120-6816	Caliper, Forged Dynalite	2
13A	120-6816-RD	Caliper, Forged Dynalite, Red	2
14	240-1159	Shim, .032 Thick	16
15	240-10190	Washer, .391 I.D. x .625 O.D. x .063 Thick	4
16	230-10025	Bolt, 3/8-24 x 1.25 Long, Hex Head	4
17	150-8850K	Pad, BP-10, Axle Set	1
18	180-0055S	Pin, Cotter	2
19	300-11961	Spacer, Wheel, .20 Thick	2

NOTES: Part Number 230-3829 Bolt Kit, adapter plate to hub, includes part number 230-11239
Part Number 230-12120 Bolt Kit, rotor to adapter plate, includes part number 230-11934
Part Number 230-11861 Bolt Kit, caliper to bracket, includes part numbers 230-10025, 240-10190 and 240-1159
Item 6A is an optional item and is available in the (D) drilled rotor kits. Add -D to end of part number when ordering.
Item 13A is an optional item and is available in the (R) red caliper kits. Add -R to end of part number when ordering.

General Information

*Installation of this kit should **ONLY** be performed by persons experienced in the installation and proper operation of disc brake systems. Before assembling the Wilwood front disc brake kit, double check the following items to ensure a trouble-free installation.*

•Make sure this is the correct kit to match the exact make and model year of the vehicles spindle (i.e., hubs for a 1955 Chevrolet spindle will not fit a 1962 spindle).

•Verify wheel clearance utilizing Figure 2.

•Inspect the package contents against the parts list to ensure that all components and hardware are included.

•Verify the new hub stud pattern in this kit matches the lug pattern of the vehicles wheels.

•***WARNING:*** *The wheel contact surfaces must seat completely on the face of the hub.* If any contact surfaces overhang the outside diameter of the hub face, a 6.60” diameter x .20” thick steel spacer (Item 19, Wilwood P/N 300-11961) MUST be used between the wheel and the hub.

•To prevent damage to the hub face, a 6.15” diameter x .09” thick hub shield (Wilwood P/N 300-10716, sold separately) should be used with any *stamped steel wheels* that do NOT overhang the outside diameter of the hub face.

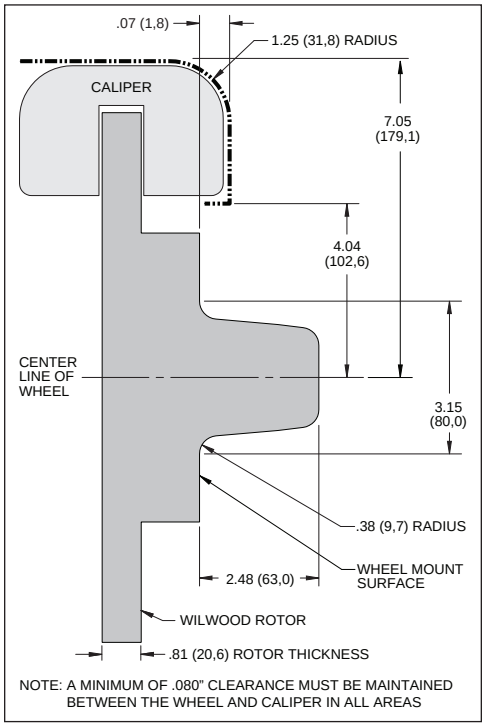

Figure 2. Wheel Clearance Diagram

•Always tighten lug nuts to the wheel manufacturer’s specifications.

•Always recheck the lug nuts after test driving the vehicle at safe speeds. If they are NOT still tight, inspect the wheel-to-hub contact surfaces for damage and/or incomplete contact.

General Information (Continued), Disassembly, and Assembly Instructions

•As routine maintenance, periodically remove the wheels and inspect the wheel-to-hub contact surfaces for damage.

•It is the installer's responsibility to ensure that the wheels used with this hub kit are properly and securely installed. Some wheels may NOT be compatible with the hub in this kit.

Disassembly Instructions

•Disassemble the original equipment front brakes:

Raise the front wheels off the ground and support the front suspension according to vehicle manufacturer's instructions.

Remove the front wheels and completely disassemble the stock brake system down to the bare spindles. Save the Original Equipment Manufacturer (OEM) spindle nuts and nut locks (if any).

•Remove any nicks or burrs on the spindle mount faces that may interfere with the installation of the new brake components.

•Clean and de-grease the spindles and saved components.

Assembly Instructions (numbers in parenthesis refer to the parts list and Figure 1 on the preceding pages):

•Install your own caliper mounting bracket to the spindle face. Apply red *Loctite*® 271 to the threads, and torque to specificatiions.

•Install wheel studs (1) into the hub (2), Photo 1. Torque to 77 ft-lb. ***NOTE:*** *There are two five lug patterns in the hub (5 x 4.50 and 5 x 4.75).* Ensure the correct hub stud pattern is being used to fit the wheel application.

•Pack the large inner bearing cone (3) with high temperature disc brake bearing grease (available from your local auto parts store) and install into the backside of the hub (2), Photo 2.

•Install the grease seal (4) by pressing into the backside of the hub (2), flush with the end of the hub, Photo 2.

Photo 1

Photo 2

•Orient the rotor (6) and the rotor adapter (5) as shown in Figure 1 and Photo 3. Attach the rotor to the adapter using bolts (7). Using an alternating sequence, apply red *Loctite*® 271 to the threads, and torque to 25 ft-lb.

•Mount the adapter/rotor assembly (5/6) to the hub (2) using bolts (8), as shown in Figure 1 and Photo 4. Using an alternating sequence, apply red *Loctite*® 271 to the threads, and torque to 55 ft-lb.

•Pack the small outer bearing cone (9) with high temperature disc brake bearing grease and install into hub (2). Slide the hub/rotor assembly onto the spindle. Secure using spindle washer (10) and OEM spindle nut, Photo 5. Adjust bearings per instructions below. Install saved OEM nut lock (if any) and a new cotter pin (not supplied).

Photo 3

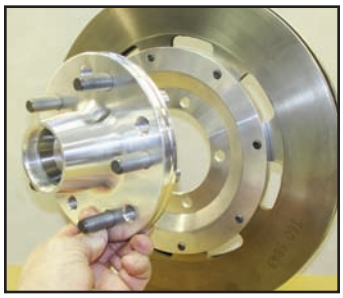

Photo 4

•Bearing adjustment:

Tighten the wheel bearing nut to 60 in-lb while turning the hub/rotor assembly (5 and 6). Position the nut lock on the wheel bearing nut with one pair of slots in-line with (covering) the cotter pin hole. Back off the adjusting nut lock assembly one slot and install a new cotter pin (not supplied). **The resulting adjustment should be zero (no pre-load) to 0.003 inch end play.**

Assembly Instructions (Continued)

•Screw dust cap (12) into hub (2), Photo 6. Friction created by the o-ring (11) on the dust cap keeps it from unscrewing. ***NOTE:*** *The O.D. of the existing OEM spindle washer may be larger than the I.D. of the dust cap not allowing it to seat against the hub face. Therefore, use the spindle washer (10) supplied with the kit instead of the OEM washer.*

Photo 5

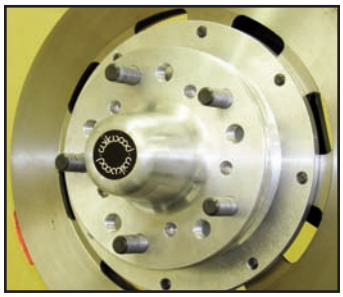

Photo 6

•Mount the caliper (13) onto the caliper mounting bracket (customer supplied) using bolts (16) and washers (15), as shown in Figure 1. Initially place two .035" thick shims (14) on each bolt between the caliper and the bracket, Photo 7. Temporarily tighten the mounting bolts and view the rotor (6) through the top opening of the caliper. The rotor should be centered in the caliper, Photo 8. If not, adjust by adding or subtracting shims between the bracket and the caliper. Always use the same amount of shims on each of the two mounting bolts. Once the caliper alignment is correct, remove the bolts one at a time, apply red *Loctite*® 271 to bolt threads, and torque to 40 ft-lb.

•Install the disc brake pads (17) into the caliper, with the friction material facing the rotor (6), and secure in place using cotter pin (18), Photo 9.

•Temporarily install wheel and torque lug nuts to manufacturer's specification. Ensure that the wheel rotates freely without any interference. ***NOTE:*** *Wheel spacer (19) MUST be used if any wheel contact surfaces overhang the outside diameter of the hub face. See warning on page 3.*

Photo 7

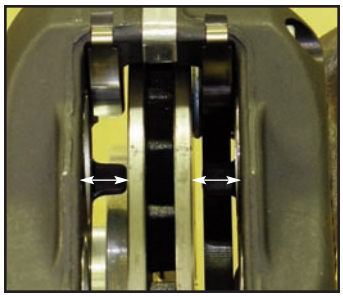

Photo 8

•***NOTE****: OEM rubber brake hoses generally cannot be adapted to Wilwood calipers. The caliper inlet fitting is a 1/8-27 NPT.* The preferred method is to use steel adapter fittings at the caliper, either straight, 45 or 90 degree and enough steel braided line to allow for full suspension travel and turning radius, lock to lock. **Carefully route hoses to prevent contact with moving suspension, brake or wheel components.** ***NOTE:*** *Wilwood hose kits are designed for use in many different vehicle applications and it is the installer's responsibility to properly route and ensure adequate clearance and retention for brake hose components.* Wilwood offers universal brake flex line hose kits, order P/N 220-7056 for the 14 inch length, P/N 220-7699 for the 16 inch length, or P/N 220-8307 for the 18 inch length. Hose kits include hoses, fitting, etc., all in one package for this application.

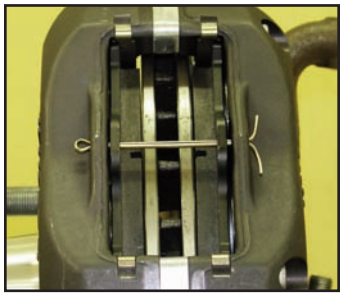

Photo 9

•***NOTE:*** *Specified brake hose kits may not work with all Years, Makes and Models of vehicle that this brake kit is applicable to, due to possible OEM manufacturing changes during a production vehicle's life.* It is the installer's responsibility to ensure that all fittings and hoses are the correct size and length, to ensure proper sealing and that they will not be subject to crimping, strain and abrasion from vibration or interference with suspension components, brake rotor or wheel.

•In absence of specific instructions for brake line routing, the installer must use his best professional judgment on correct routing and retention of lines to ensure safe operation. Test vehicle brake system per the 'minimum test' procedure stated within this document before driving. After road testing, inspect for leaks and interference. Initially after install and testing, perform frequent checks of the vehicle brake system and lines before driving, to confirm that there is no undue wear or interference not apparent from the initial test. Afterwards, perform periodic inspections for function, leaks and wear in a interval relative to the usage of vehicle.

• Bleed the brake system, referring to the additional information and recommendations on page 6 for proper bleeding instructions. Check system for leaks after bleeding.

Assembly Instructions (Continued)

• Install the wheel and torque to manufacturer's specifications. ***NOTE:*** *Wheel spacer (19) MUST be used if any wheel contact surfaces overhang the outside diameter of the hub face. See warning on page 3.*

Balancing the Brake Bias on 4 Wheel Disc Vehicles

•OE Style or Single Mount Race Pedal with Tandem Outlet Master Cylinder:
Front to rear caliper piston sizes, rotor diameters, and pad compounds must be initially configured to provide the correct range of vehicle bias when using a single bore / tandem outlet master cylinder. If excessive rear brake bias is experienced, an in-line adjustable proportioning valve can be used to decrease the rear line pressure to help bring the vehicle into balance. If excessive front brake bias is experienced, first consideration should be given to increasing the rear brake bias to bring the vehicle into overall balance.

•Race Pedal with Dual Master Cylinders and Balance Bar:
Master cylinders must be sized to match the calipers and allow the pedal balance bar to operate near the center of its travel. If it is not possible to fine tune the bias within the adjustable range of the balance bar, then consideration must be given to changing a master cylinder bore size or some other aspect of the brake system to bring the car into balance. Larger bore master cylinders will generate less pressure while decreasing pedal travel. Smaller bores master cylinders will generate higher line pressures with an increase in pedal travel.

Additional Information and Recommendations

•Fill and bleed the new system with Wilwood Hi-Temp° 570 grade fluid or higher. For severe braking or sustained high heat operation, use Wilwood EXP 600 Plus Racing Brake Fluid. Used fluid must be completely flushed from the system to prevent contamination. ***NOTE:*** *Silicone DOT 5 brake fluid is* ***NOT*** *recommended for racing or performance driving*.

•To properly bleed the brake system, begin with the caliper farthest from the master cylinder. Bleed the outboard bleed screw first, then the inboard. Repeat the procedure until all calipers in the system are bled, ending with the caliper closest to the master cylinder. ***NOTE:*** *When using a new master cylinder, it is important to bench bleed the master cylinder first.*

•If the master cylinder is mounted lower than the disc brake calipers, some fluid flowback to the master cylinder reservoir may occur, creating a vacuum effect that retracts the caliper pistons into the housing. This will cause the pedal to go to the floor on the first stroke until it has "pumped up" and moved all the pistons out against the pad again. A Wilwood in-line two pound residual pressure valve, installed near the master cylinder will stop the fluid flowback and keep the pedal firm and responsive.

•Test the brake pedal. It should be firm, not spongy and stop at least 1 inch from the floor under heavy load.

If the brake pedal is spongy, bleed the system again.

If the brake pedal is initially firm, but then sinks to the floor, check the system for fluid leaks. Correct the leaks (if applicable) and then bleed the system again.

If the brake pedal goes to the floor and continued bleeding of the system does not correct the problem, a master cylinder with increased capacity (larger bore diameter) will be required. Wilwood offers various lightweight master cylinders with large fluid displacement capacities.

•***NOTE:*** *With the installation of after market disc brakes, the wheel track may change depending on the application.* Check your wheel offset before final assembly.

•On some models of disc brake spindles there are "ears" where the OEM calipers were mounted and these "ears" interfere with the assembly of the Wilwood disc brake kit. If it becomes necessary to remove these "ears", remove as little as possible being careful not to cut away any of the mounting holes that may be required to bolt on the caliper mounting bracket.

•If after following the instructions, you still have difficulty in assembling or bleeding your Wilwood disc brakes, consult your local chassis builder, or retailer where the kit was purchased for further assistance.

Brake Testing

WARNING • DO NOT DRIVE ON UNTESTED BRAKES
BRAKES MUST BE TESTED AFTER INSTALLATION OR MAINTENANCE
MINIMUM TEST PROCEDURE

- Make sure pedal is firm: Hold firm pressure on pedal for several minutes, it should remain in position without sinking. If pedal sinks toward floor, check system for fluid leaks. DO NOT drive vehicle if pedal does not stay firm or can be pushed to the floor with normal pressure.
- At very low speed (2-5 mph) apply brakes hard several times while turning steering from full left to full right, repeat several times. Remove the wheels and check that components are not touching, rubbing, or leaking.
- Carefully examine all brake components, brake lines, and fittings for leaks and interference.
- Make sure there is no interference with wheels or suspension components.
- Drive vehicle at low speed (15-20 mph) making moderate and hard stops. Brakes should feel normal and positive. Again check for leaks and interference.
- Always test vehicle in a safe place where there is no danger to (or from) other people or vehicles.
- Always wear seat belts and make use of all safety equipment.

Pad and Rotor Bedding

BEDDING STEPS FOR NEW PADS AND ROTORS – ALL COMPOUNDS

Once the brake system has been tested and determined safe to operate the vehicle, follow these steps for the bedding of all new pad materials and rotors. These procedures should only be performed on a race track, or other safe location where you can safely and legally obtains speeds up to 65 MPH, while also being able to rapidly decelerate.

- Begin with a series of light decelerations to gradually build some heat in the brakes. Use an on-and-off the pedal technique by applying the brakes for 3-5 seconds, and then allow them to fully release for a period roughly twice as long as the deceleration cycle. If you use a 5 count during the deceleration interval, use a 10 count during the release to allow the heat to sink into the pads and rotors.
- After several cycles of light stops to begin warming the brakes, proceed with a series of medium to firm deceleration stops to continue raising the temperature level in the brakes.
- Finish the bedding cycle with a series of 8-10 hard decelerations from 55-65 MPH down to 25 MPH while allowing a proportionate release and heat-sinking interval between each stop. The pads should now be providing positive and consistent response.
- If any amount of brake fade is observed during the bed-in cycle, immediately begin the cool down cycle.
- Drive at a moderate cruising speed, with the least amount of brake contact possible, until most of the heat has dissipated from the brakes. Avoid sitting stopped with the brake pedal depressed to hold the car in place during this time. Park the vehicle and allow the brakes to cool to ambient air temperature.

COMPETITION VEHICLES

- If your race car is equipped with brake cooling ducts, blocking them will allow the pads and rotors to warm up quicker and speed up the bedding process.
- Temperature indicating paint on the rotor and pad edges can provide valuable data regarding observed temperatures during the bedding process and subsequent on-track sessions. This information can be highly beneficial when evaluating pad compounds and cooling efficiencies.

Pad and Rotor Bedding (Continued)

POST-BEDDING INSPECTION – ALL VEHICLES

- After the bedding cycle, the rotors should exhibit a uniformly burnished finish across the entire contact face. Any surface irregularities that appear as smearing or splotching on the rotor faces can be an indication that the brakes were brought up to temperature too quickly during the bedding cycle. If the smear doesn't blend away after the next run-in cycle, or if chatter under braking results, sanding or resurfacing the rotors will be required to restore a uniform surface for pad contact.

PRE-RACE WARM UP

- Always make every effort to get heat into the brakes prior to each event. Use an on-and-off the pedal practice to warm the brakes during the trip to the staging zone, during parade laps before the flag drops, and every other opportunity in an effort to build heat in the pads and rotors. This will help to ensure best consistency, performance, and durability from your brakes.

DYNO BEDDED COMPETITION PADS AND ROTORS

- Getting track time for a proper pad and rotor bedding session can be difficult. Wilwood offers factory dyno-bedded pads and rotors on many of our popular competition pads and ***Spec 37*** GT series rotors. Dyno-bedded parts are ready to race on their first warm up cycle. This can save valuable time and effort when on-track time is either too valuable or not available at all, Dyno-bedding assures that your pads and rotors have been properly run-in and are ready to go. Contact your dealer or the factory for more information on Wilwood Dyno-Bedding services.

NOTE:

NEVER allow the contact surfaces of the pads or rotors to be contaminated with brake fluid. Always use a catch bottle with a hose to prevent fluid spill during all brake bleeding procedures.

Connect with Wilwood

Wilwood Social Forum Wilwood Facebook Wilwood Twitter Wilwood YouTube

Associated Components

PART NO.	DESCRIPTION
260-1874	Wilwood Residual Pressure Valve (2 lb for disc brakes)
260-1876	Wilwood Residual Pressure Valve (10 lb for drum brakes)
260-8419	Wilwood Proportioning Valve
290-0632	Wilwood Racing Brake Fluid (Hi-Temp° 570) (12 oz)
290-6209	Wilwood Racing Brake Fluid (EXP 600 Plus) (16.9 oz)
340-1285	Wilwood Floor Mount Brake Pedal (with balance bar)
340-1287	Wilwood Swing Mount Brake Pedal (with balance bar)
260-6764	Wilwood 3/4 inch High Volume Aluminum Master Cylinder
260-6765	Wilwood 7/8 inch High Volume Aluminum Master Cylinder
260-6766	Wilwood 1 inch High Volume Aluminum Master Cylinder
260-4893	1-1/16 inch Tandem Master Cylinder (aluminum housing)
250-2406	Mounting Bracket Kit (tandem master cylinder)
260-8555	Wilwood 1 inch Aluminum Tandem Chamber Master Cylinder
260-8556	Wilwood 1-1/8 inch Aluminum Tandem Chamber Master Cylinder
350-2038	1971 - 1973 Pinto Rack and Pinion (new, not rebuilt)
270-2016	Quick Release Steering Hub (3/4 inch shaft)
270-2017	Quick Release Steering Hub (5/8 inch shaft)
220-7056	Flexline Kit, Universal, 14 Inch, Domestic
220-7699	Flexline Kit, Universal, 16 Inch, Domestic
220-8307	Flexline Kit, Universal, 18 Inch, Domestic