ASSEMBLY INSTRUCTIONS

FOR

1970 - 1976 CHEVY CAPRICE*

***For additional vehicle compatibility, visit www.wilwood.com**

FNSL6R FRONT BRAKE KIT WITH 13.06" DIAMETER VENTED ROTOR AND FLEXLINES

BASE PART NUMBER

140-18622

DISC BRAKES SHOULD ONLY BE INSTALLED BY SOMEONE EXPERIENCED AND COMPETENT IN THE INSTALLATION AND MAINTENANCE OF DISC BRAKES

READ ALL WARNINGS

WARNING

IT IS THE RESPONSIBILITY OF THE PERSON INSTALLING ANY BRAKE COMPONENT OR KIT TO DETERMINE THE SUITABILITY OF THE COMPONENT OR KIT FOR THAT PARTICULAR APPLICATION. IF YOU ARE NOT SURE HOW TO SAFELY USE THIS BRAKE COMPONENT OR KIT, YOU SHOULD NOT INSTALL OR USE IT. DO NOT ASSUME ANYTHING. IMPROPERLY INSTALLED OR MAINTAINED BRAKES ARE DANGEROUS. IF YOU ARE NOT SURE, GET HELP OR RETURN THE PRODUCT. YOU MAY OBTAIN ADDITIONAL INFORMATION AND TECHNICAL SUPPORT BY CALLING WILWOOD AT (805) 388-1188, OR VISIT OUR WEB SITE AT WWW.WILWOOD.COM. USE OF WILWOOD TECHNICAL SUPPORT DOES NOT GUARANTEE PROPER INSTALLATION. **YOU**, OR THE PERSON WHO DOES THE INSTALLATION MUST KNOW HOW TO PROPERLY USE THIS PRODUCT. IT IS NOT POSSIBLE OVER THE PHONE TO UNDERSTAND OR FORESEE ALL THE ISSUES THAT MIGHT ARISE IN YOUR INSTALLATION.

RACING EQUIPMENT AND BRAKES MUST BE MAINTAINED AND SHOULD BE CHECKED REGULARLY FOR FATIGUE, DAMAGE, AND WEAR.

Need Additional Information? Use Your SmartPhone and Jump to Our Technical Tips Section on Our Web Site.

DISC BRAKES wilwood

WARNING

DO NOT OPERATE ANY VEHICLE ON UNTESTED BRAKES!

SEE MINIMUM TEST PROCEDURE WITHIN

ALWAYS UTILIZE SAFETY RESTRAINT SYSTEMS AND ALL OTHER AVAILABLE SAFETY EQUIPMENT WHILE OPERATING THE VEHICLE

IMPORTANT • READ THE DISCLAIMER OF WARRANTY INCLUDED IN THE KIT

NOTE: Some cleaners may stain or remove the finish on brake system components. Test the cleaner on a hidden portion of the component before general use.

WHEEL CLEARANCE DIAGRAM

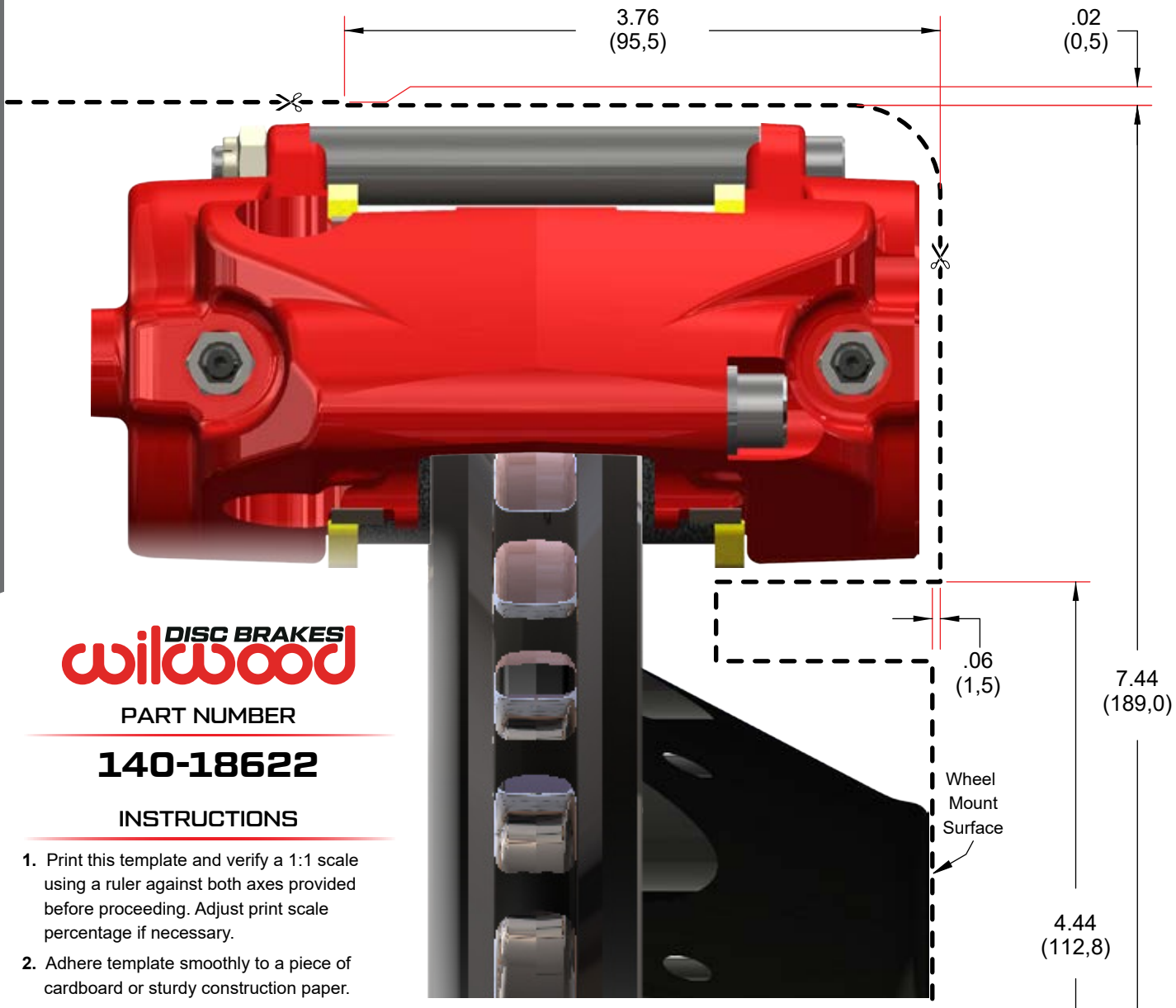

DISC BRAKES wilwood

PART NUMBER

140-18622

INSTRUCTIONS

1. Print this template and verify a 1:1 scale using a ruler against both axes provided before proceeding. Adjust print scale percentage if necessary.
2. Adhere template smoothly to a piece of cardboard or sturdy construction paper.
3. Measure wheel center hole diameter. Find corresponding measurement shown in **Wheel Center Hole Diameter Chart.** Cut template following the bold, dashed lines and along the matching center hole diameter lines.
4. Fit template into wheel and determine if adequate clearance is present. A minimum of .080" clearance must be maintained between the wheel and caliper in all areas.
5. Minimum wheel center hole diameter is **3.06"**.

FITMENT NOTES

- Actual parts may vary. Use this template as a guideline to determine your wheel clearance before attempting installation.
- The wheel clearance diagram is intended for general fitment purposes. ***DO NOT*** rely on this diagram to make custom wheels. Have the wheel company contact Wilwood for a 3D model of the brake kit before making custom wheels.

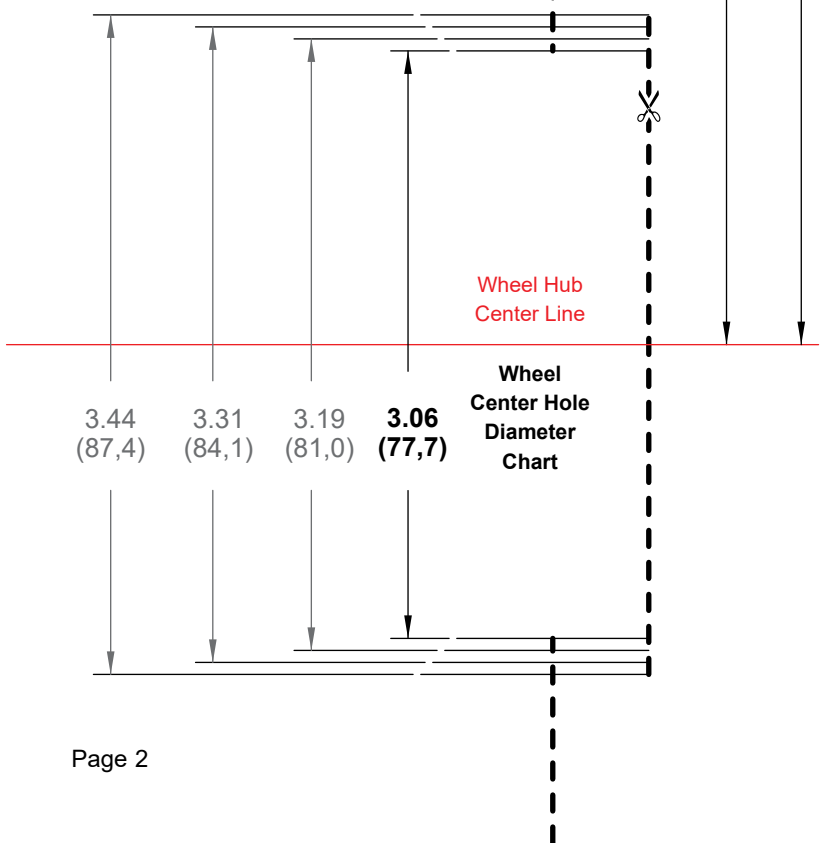

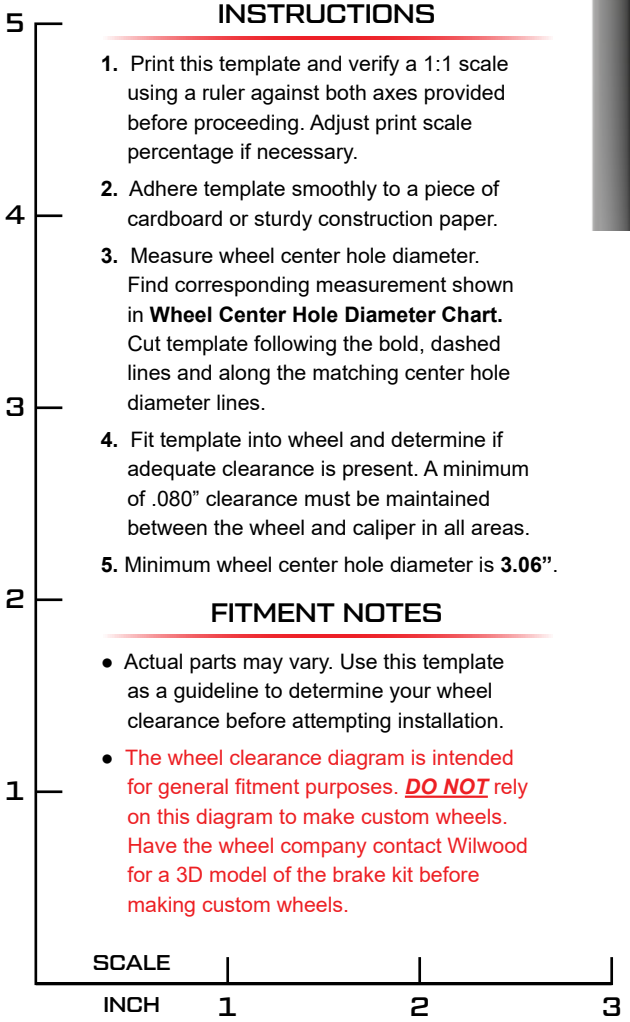

Exploded Assembly Diagram

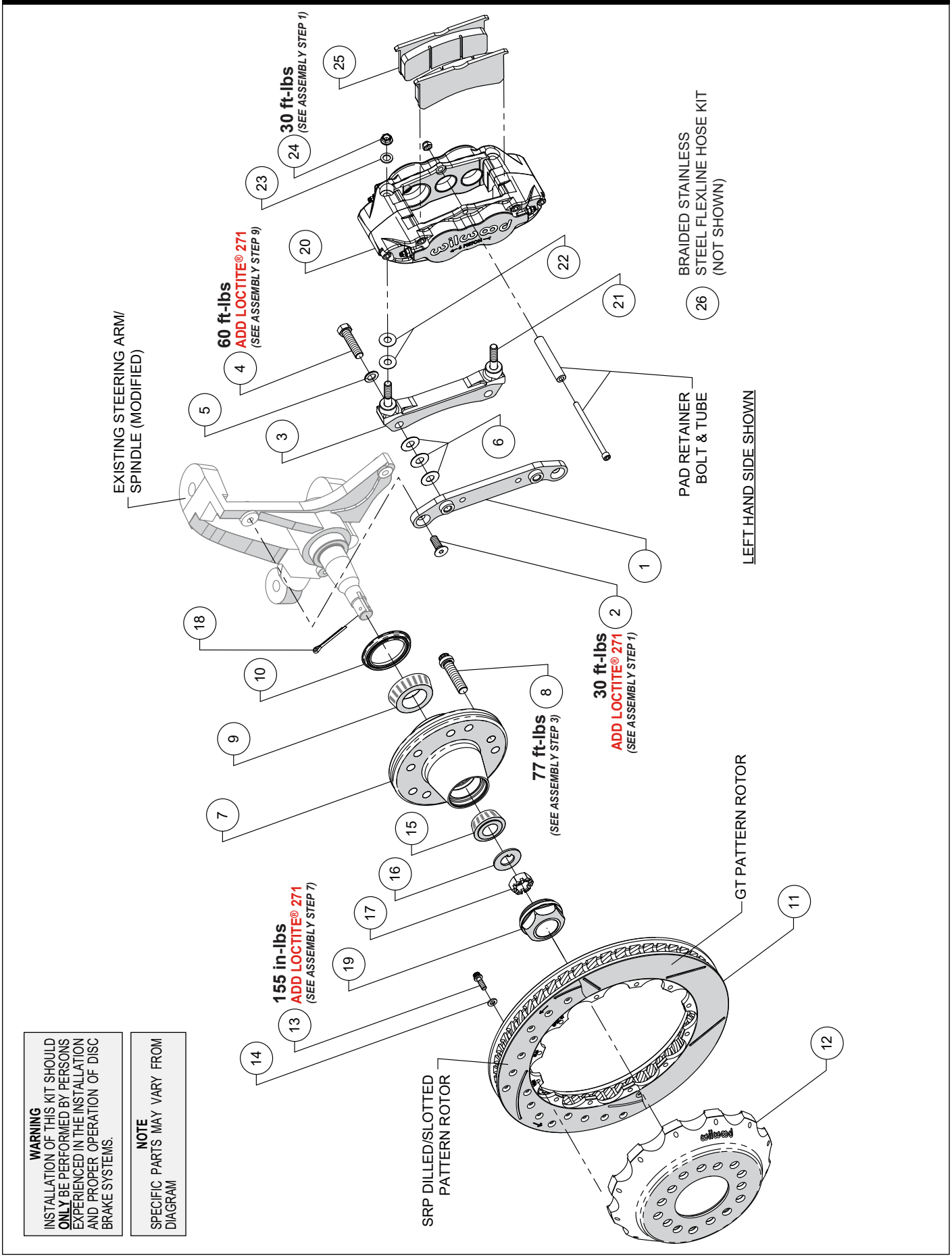

WARNING
INSTALLATION OF THIS KIT SHOULD **ONLY** BE PERFORMED BY PERSONS EXPERIENCED IN THE INSTALLATION AND PROPER OPERATION OF DISC BRAKE SYSTEMS.

NOTE
SPECIFIC PARTS MAY VARY FROM DIAGRAM

Figure 1. Typical Installation Configuration

Important Notice - Read This First

Before any tear-down or disassembly begins, review the following information:

- **A substantial amount of modifications are required to the stock steering arm/spindle. These include drilling and tapping two holes as well as removing two "ears" that will interfere with the assembly of the Wilwood disc brake kit. It is recommended that these modifications be performed by a qualified machine shop. Keep in mind that this may require a substantial amount of time. Therefore, the vehicle may be inoperable for longer than anticipated.**
- **Review the wheel clearance diagram Page 2 to verify that there is adequate clearance with the wheels you will be using with the installation.**
- **This brake kit does not include flex lines. OEM brake lines will not adapt to Wilwood calipers. Check the assembly instructions, or associated components section for brake line recommendations before assembly. In addition, Wilwood offers an extensive listing of brake lines and fittings on our web site: www.wilwood.com.**
- **Due to OEM production differences and other variations from vehicle to vehicle, the fastener hardware and other components in this kit may not be suitable for a specific application or vehicle.**
- **It is the responsibility of the purchaser and installer of this kit to verify suitability / fitment of all components and ensure all fasteners and hardware achieve complete and proper engagement. Improper or inadequate engagement can lead to component failure.**

Photographic Tip

Important and highly recommended: Take photos of brake system before disassembly and during the disassembly process. In the event, trouble-shooting photos can be life savers. Many vehicles have undocumented variations, photos will make it much simpler for Wilwood to assist you if you have a problem.

Parts List

ITEM NO.	PART NO.	DESCRIPTION	QTY
1	250-10488	Bracket, Flat, Mounting	2
2	230-3206	Bolt, 3/8-24 x 1.00" Long, FHCS	4
3	250-17094	Bracket, Caliper Mounting	2
4	230-10023	Bolt, 7/16-20 x 1.75" Long, Hex Head	4
5	240-11101	Washer, .453" I.D. x .750" O.D. x .063" Thick	4
6	240-1848	Shim, .030" Thick	16
7	270-18633	Hub Assembly	2
8	230-6959	Stud, 1/2-20 x 2.00" Long, 12 Point	10
9	370-2609	Cone, Inner Bearing	2
10	380-10792	Seal, Grease	2
11	160-8165/66-GTB	Rotor, 1.25" Thk x 13.06" Dia, 12 x 8.75" Bolt Circle (one each, right and left)	2
11A	160-7798/99-BK	Rotor, Drilled and Slotted	2
12	170-15859	Hat, 5 x 4.50"/4.75"/5.00"	2
13	230-8037	Bolt, 1/4-20 x .75" Long, 12 Point	24
14	240-11240	Washer, .265" I.D. x .500" O.D. x .063" Thick	24
15	370-9542	Cone, Outer Bearing	2
16	240-2283	Washer, Spindle 3/4"	2
17	230-9540	Nut, Spindle 3/4-20"	2
18	180-15902	Cotter Pin, 5/32 x 1.50" Long	2
19	270-14870	Cap, Dust	2
20	120-14550/51-BK	Caliper, FNSL6R, Black (one each, right and left)	2
20A	120-14550/51-RD	Caliper, FNSL6R, Red	2
21	230-9078	Stud, 3/8-16, 3/8-24 x 2.50" Long (pre installed in bracket)	4
22	240-1159	Shim, .035" Thick	12
23	240-10190	Washer, .391" I.D. x .625" O.D. x. 063" Thick	4
24	230-16550	Nut, 3/8-24, Self-Lock, 6 Point	4
25	150-22-7416K	Pad, BP-22, Axle Set	1
26	220-10509	Braided Stainless Steel Flexline Hose Kit (not shown)	1

NOTES: Part Number 230-4306, Bolt Kit, Bracket to Spindle includes part number 230-3206
Part Number 230-7031, Bolt Kit, Bracket to Bracket includes part numbers 230-10023, 240-1848, and 240-11101
Part Number 230-14200 Bolt Kit, Wheel Studs, includes part number 230-6959
Part Number 230-8008, Bolt Kit, Rotor to Hat includes part numbers 230-8037 and 240-11240
Part Number 370-18636, Bolt Kit, Spindle Nut includes part numbers 180-15902, 230-9540, and 240-2283
Part Number 250-17095 Bracket Kit, Caliper Mounting includes part numbers 230-9078, 230-16550, 240-1159, 240-10190 and 250-17094
Item 11A is an optional item and is included in the (D) drilled kits. Add -D to end of part number when ordering
Item 20A is an optional item and is included in the (R) kits. Add -R to end of part number when ordering

General Information

*Installation of this kit should **ONLY** be performed by persons experienced in the installation and proper operation of disc brake systems. Before assembling the Wilwood disc brake kit, double check the following items to ensure a trouble-free installation.*

•Make sure this is the correct kit to match the exact make and model year of the vehicles spindle. This kit is designed for installation of a 1970-1976 Chevy Caprice spindle.

•Verify the hub stud pattern in this kit (5 x 4.75 and 5 x 5.00) matches the stud pattern of the vehicles wheels.

•Verify your wheel clearance using the Wheel Clearance diagram on page 2.

•Inspect the package contents against the parts list to ensure that all components and hardware are included.

Disassembly Instructions

Disassemble the original equipment front brakes:

Raise the front wheels off the ground and support the front suspension according to the vehicle manufacturer's instructions

Remove the front wheels and completely disassemble the stock brake system down to the bare spindles.

•Remove any nicks or burrs on the spindle mount faces that may interfere with the installation of the new brake components.

•Clean and de-grease the spindles.

Steering Arm / Spindle Modifications

These modifications should be performed by a qualified machinist. Refer to Figure 1 as necessary (numbers in parenthesis refer to the parts list on page four). Only one view of the steering arm/ spindle is shown, but the modifications need to be performed on both steering arm/spindles.

Modification Procedure

The two stock holes that will be used to mount the caliper mounting bracket (1) need to be modified (Figure 2). Drill a .332 diameter hole through both holes, then tap 3/8-24 UNF (fine thread). Countersink the holes to .438 x 90°. The "ears" that protrude to form a "C" shape need to be removed to facilitate the installation of the Wilwood caliper (20). Using the caliper mounting bracket (1) as a template, mark two cut marks on the steering arm. Remove as little as necessary from the "C" shape, being careful not to cut away any of the mounting holes required to bolt on the flat mounting bracket (1).

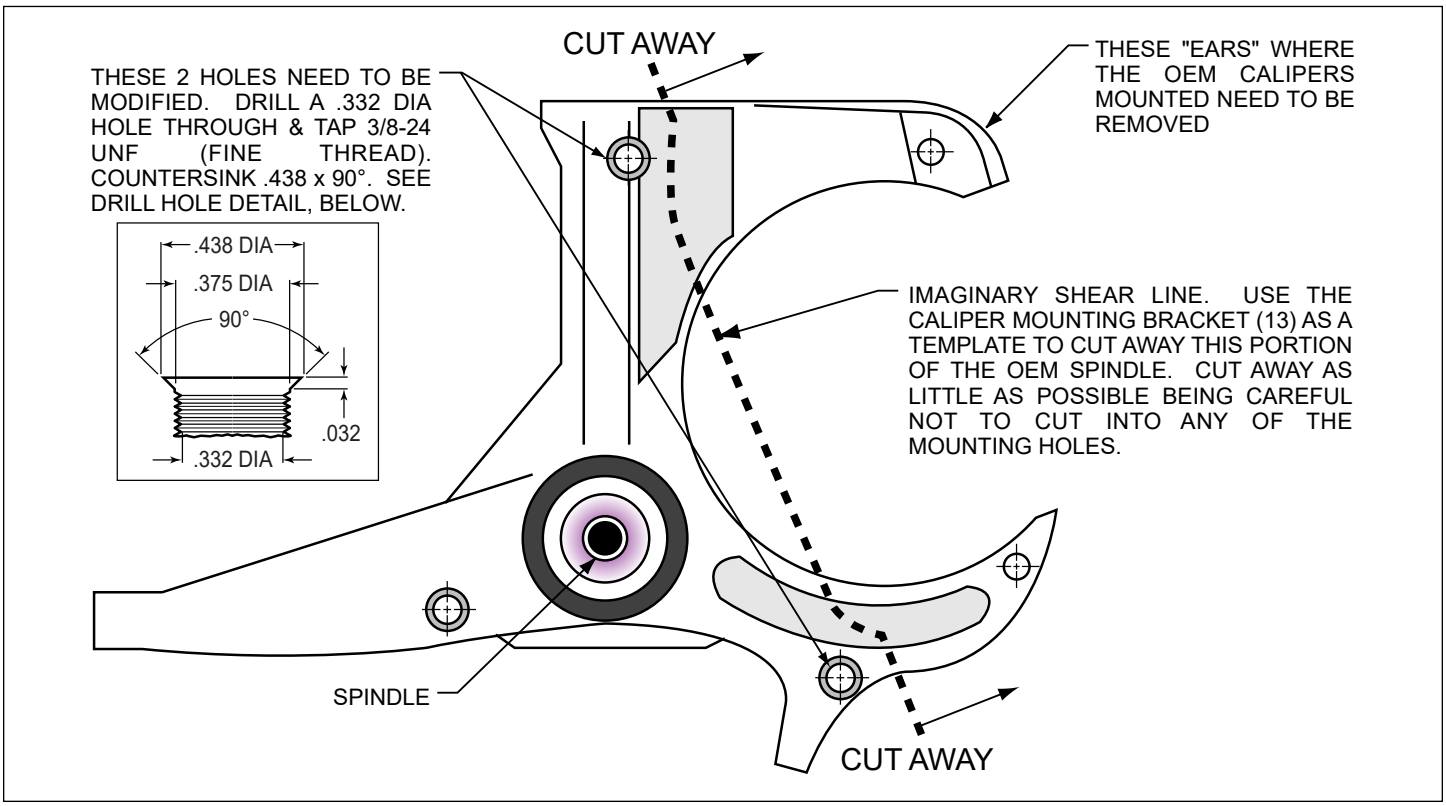

Figure 2. Steering Arm / Spindle Modifications

Assembly Instructions

NOTE: *Numbers in parenthesis refer to the parts list on the preceding page and Figure 1.*

CAUTION: *All mounting bolts must fully engage clinch nuts.* Be sure to check that all bolts are either flush or protruding through flanged side of clinch nut after shimming, Figure 3.

STEP 1 Orient the flat mounting flat bracket (1) as shown in Figure 1 and install using bolts (2), Photo 1. ***NOTE****: Be sure the heads of the flat mount bracket clinch nuts are facing outward toward the wheel.* Temporarily tighten the mounting bolts. ***NOTE:*** *The bracket must fit squarely against the mount bosses on the upright.* Inspect for interference from casting irregularities, machining ridges, burrs, etc. After the bracket fitment has been checked, remove the bracket mounting bolts (2) one at a time, apply red *Loctite*® 271 to the threads and torque to value shown in Figure 1.

STEP 2 ***NOTE:*** *Please reference the caution statement at the beginning of the assembly instructions.* The radial mount caliper bracket (3) should initially be installed with clean, dry threads on the mounting bolts (4). Orient the bracket, as shown in Figure 1 and install using bolts (4), washers (5) and shims (6). Initially place three .030" thick shims (6) on each bolt between the radial mount caliper bracket (3) and caliper mounting flat bracket (1), Figure 1, Photos 2 and 3. Temporarily tighten the mounting bolts. Later, after the caliper alignment has been checked, the mount bolts will be secured using red *Loctite*® 271.

STEP 3 Install five new wheel studs (8) into the hub (7), Figure 1, Photo 4 and torque to value shown in Figure 1. ***NOTE:*** *There are two five lug patterns in the hub (5 x 4.75 and 5 x 5.00).* Make sure of the correct hole pattern for the correct wheel application before installing studs into hub.

STEP 4 Pack the large inner bearing cone (9) Photo 5 with high temperature disc brake bearing grease (available from your local auto parts store) and install into the backside of the hub (7).

STEP 5 Install the grease seal (10) by pressing into the backside of the hub (7) Photo 6.

STEP 6 Pack the small outer bearing cone (15) with high temperature disc brake bearing grease and install into front side of the hub (7). Slide the hub assembly onto the spindle. Secure using spindle washer (16) and spindle nut (17), Photo 7. Adjust bearings per OEM specifications. Install cotter pin (18).

STEP 7 Install dust cap (19) into the hub (7), Figure 1 and Photo 8. Friction created by the o-ring on the dust cap, keeps it from unscrewing.

STEP 8 Orient the rotor (11) and the hat (12) as shown in Figure 1 and Photo 9. Attach rotor to hat using bolts (13) and washers (14). Apply red *Loctite*® 271 to the bolt threads and torque to value shown in Figure 1 using a criss-cross pattern. For an added measure of security, the bolts may be safety wired using standard 0.032 inch diameter stainless steel safety wire as

Photo 1

Photo 2

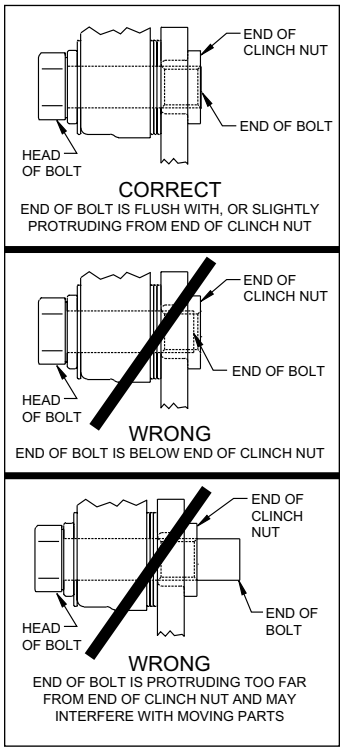

Figure 3. Clinch Nut Engagement Diagram

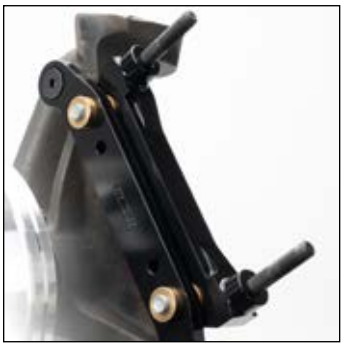

Photo 3

Photo 4

Photo 5

Photo 6

shown in Figure 4. Please refer to Wilwood's data sheet DS-386 (available at www.wilwood.com/Pdf/DataSheets/ds386.pdf) for complete safety wire installation instructions.

STEP 9 Slide the hat/rotor (12 and 11) assembly onto the axle flange, Photo 10. ***NOTE:*** *The hat must fit flush against the axle flange or excessive rotor run out may result.* Install three lug nuts (finger tight) to keep the rotor/hat assembly in place while continuing with the installation. ***NOTE:*** *Some OEM and after market axles come with stud sizes larger than 0.50" diameter. Verify stud size and have a qualified machine shop drill the bolt circle of the hat/rotor to the correct stud size, if necessary.*

STEP 10 ***NOTE:*** *This kit contains distinct right and left hand calipers that must be mounted in a specific direction, as described in below.* Initially place two .035" shims (22) on each stud between the caliper and the bracket, as shown in Figure 1 and Photo 11. Mount the caliper (20) onto the radial mount caliper bracket (3) using lock nuts (24) and washers (23), Figure 1. Ensure that the caliper is mounted so the largest pistons are at the rotor exit end of the caliper, in relation to the forward direction of rotor rotation. Temporarily tighten the lock nuts and view the rotor through the top opening of the caliper. The rotor should be centered in the caliper, Photo 12. If not, adjust by adding or subtracting .030" shims (6) as necessary between the radial mount caliper bracket (3) and the caliper mounting flat bracket (1). Always use the same amount of shims on each of the two mounting bolts (4). Once the caliper alignment is correct, remove the radial mount caliper bracket bolts (4) one at a time, apply red *Loctite*® 271 to the threads, and torque to value shown in Figure 1.

STEP 11 Remove the caliper pad retainer bolt, locknut, and tube from the caliper. Slide the brake pads (25) into place from the top, Photo 13. They should install easily without interference. Reinstall the caliper onto the caliper mounting bracket and temporarily tighten the lock nuts (24). Check that the top of the brake pad is flush with the outside diameter of the rotor, Photo 14. If not, adjust by adding or subtracting shims (22) between the caliper and the bracket. After the caliper pad height is set, torque the caliper lock nuts (24) to value shown in Figure 1.

STEP 12 Temporarily install the wheel and torque the lug nuts to the manufacturer's specification. Ensure that the wheel rotates freely without any interference. Remove wheel for next step.

STEP 13 Attach supplied brake line to caliper. ***NOTE****: OEM rubber brake hoses generally cannot be adapted to Wilwood calipers.* Install Wilwood's stainless steel braided flexline hose kit (26), P/N 220-10509 included with this kit. The caliper inlet fitting is a 1/8-27 NPT. Use the included steel adapter fitting at the caliper (use PTFE tape on the pipe threads of adapter fitting for proper sealing to caliper). **Ensure hoses are routed to prevent contact with moving suspension, brake or wheel components.**

- ***NOTE:*** *Wilwood hose kits are designed for use in many different vehicle applications and it is the installer's responsibility to properly route and provide adequate clearance and retention for brake hose components.*

Photo 7

Photo 8

Photo 9

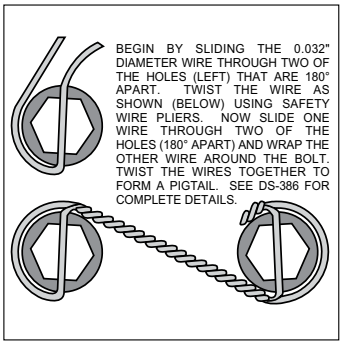

Figure 4. Safety Wire Diagram

Photo 10

Photo 11

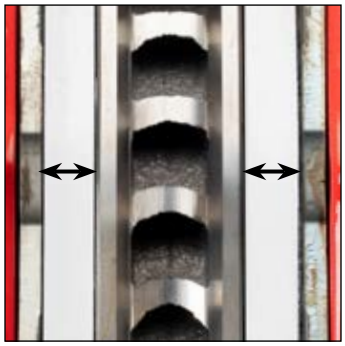

Photo 12

Photo 13

Assembly Instructions (Continued)

•***NOTE:*** *Specified brake hose kits may not work with all Years, Makes and Models of vehicle that this brake kit is applicable to, due to possible OEM manufacturing changes during a production vehicle's life.*

•***CAUTION:*** *In absence of specific instructions for brake line routing, the installer must use his best professional judgment on correct routing and retention of lines to ensure safe operation.* It is the installer's responsibility to ensure that all fittings and hoses are the correct size and length, properly seal, and that they will not be subject to crimping, strain and abrasion from vibration or interference with suspension components, brake rotor or wheel.

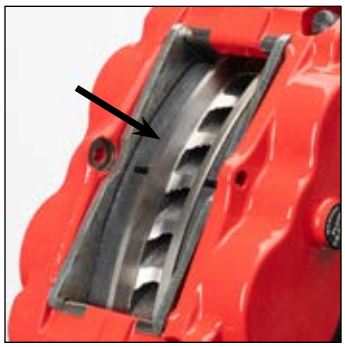

Photo 14

Photo 15

STEP 14 Bleed the brake system, referring to the '**Additional Information and Recommendations**' on page 9 for proper bleeding instructions. Check system for leaks after bleeding.

STEP 15 Install the wheel and torque the lug nuts to manufacturer's specifications.

•***CAUTION:*** *Test vehicle brake system per the* ***'Minimum Test Procedure'*** *stated within this document before driving.* After road testing, inspect for leaks and interference. Initially after install and testing, perform frequent checks of the vehicle brake system and lines before driving, to confirm that there is no undue wear or interference not apparent from the initial test. Afterwards, perform periodic inspections for function, leaks and wear in an interval relative to the usage of vehicle.

STEP 16 Bed-in the brake pads per the procedure on page 10.

Assembled Kit

Additional Information and Recommendations

•Fill and bleed the new system with Wilwood Hi-Temp° 570 grade fluid or higher. For severe braking or sustained high heat operation, use Wilwood EXP 600 Plus Racing Brake Fluid. Used fluid must be completely flushed from the system to prevent contamination. ***NOTE:*** *Silicone DOT 5 brake fluid is* ***NOT*** *recommended for racing or performance driving*.

•To properly bleed the brake system, begin with the caliper farthest from the master cylinder. Bleed the outboard bleed screw first, then the inboard. Repeat the procedure until all calipers in the system are bled, ending with the caliper closest to the master cylinder. ***NOTE:*** *When using a new master cylinder, it is important to bench bleed the master cylinder first.*

•If the master cylinder is mounted lower than the disc brake calipers, some fluid flowback to the master cylinder reservoir may occur, creating a vacuum effect that retracts the caliper pistons into the housing. This will cause the pedal to go to the floor on the first stroke until it has "pumped up" and moved all the pistons out against the pad again. A Wilwood in-line two pound residual pressure valve, installed near the master cylinder will stop the fluid flowback and keep the pedal firm and responsive.

•Test the brake pedal. It should be firm, not spongy and stop at least 1 inch from the floor under heavy load.

If the brake pedal is spongy, bleed the system again.

If the brake pedal is initially firm, but then sinks to the floor, check the system for fluid leaks. Correct the leaks (if applicable) and then bleed the system again.

If the brake pedal goes to the floor and continued bleeding of the system does not correct the problem, a master cylinder with increased capacity (larger bore diameter) will be required. Wilwood offers various lightweight master cylinders with large fluid displacement capacities (custom fabricated mounting may be required).

•***NOTE:*** *With the installation of after market disc brakes, the wheel track may change depending on the application.* Check your wheel offset before final assembly.

•If after following the instructions, you still have difficulty in assembling or bleeding your Wilwood disc brakes, consult your local chassis builder, or retailer where the kit was purchased for further assistance.

Brake Testing

WARNING • DO NOT DRIVE ON UNTESTED BRAKES
BRAKES MUST BE TESTED AFTER INSTALLATION OR MAINTENANCE
MINIMUM TEST PROCEDURE

- Make sure pedal is firm: Hold firm pressure on pedal for several minutes, it should remain in position without sinking. If pedal sinks toward floor, check system for fluid leaks. DO NOT drive vehicle if pedal does not stay firm or can be pushed to the floor with normal pressure.
- At very low speed (2-5 mph) apply brakes hard several times while turning steering from full left to full right, repeat several times. Remove the wheels and check that components are not touching, rubbing, or leaking.
- Carefully examine all brake components, brake lines, and fittings for leaks and interference.
- Make sure there is no interference with wheels or suspension components.
- Drive vehicle at low speed (15-20 mph) making moderate and hard stops. Brakes should feel normal and positive. Again check for leaks and interference.
- Always test vehicle in a safe place where there is no danger to (or from) other people or vehicles.
- Always wear seat belts and make use of all safety equipment.

Pad and Rotor Bedding

BEDDING STEPS FOR NEW PADS AND ROTORS – ALL COMPOUNDS

Once the brake system has been tested and determined safe to operate the vehicle, follow these steps for the bedding of all new pad materials and rotors. These procedures should only be performed on a race track, or other safe location where you can safely and legally obtain speeds up to 65 MPH, while also being able to rapidly decelerate.

- Begin with a series of light decelerations to gradually build some heat in the brakes. Use an on-and-off the pedal technique by applying the brakes for 3-5 seconds, and then allow them to fully release for a period roughly twice as long as the deceleration cycle. If you use a 5 count during the deceleration interval, use a 10 count during the release to allow the heat to sink into the pads and rotors.
- After several cycles of light stops to begin warming the brakes, proceed with a series of medium to firm deceleration stops to continue raising the temperature level in the brakes.
- Finish the bedding cycle with a series of 8-10 hard decelerations from 55-65 MPH down to 25 MPH while allowing a proportionate release and heat-sinking interval between each stop. The pads should now be providing positive and consistent response.
- If any amount of brake fade is observed during the bed-in cycle, immediately begin the cool down cycle.
- Drive at a moderate cruising speed, with the least amount of brake contact possible, until most of the heat has dissipated from the brakes. Avoid sitting stopped with the brake pedal depressed to hold the car in place during this time. Park the vehicle and allow the brakes to cool to ambient air temperature.

COMPETITION VEHICLES

- If your race car is equipped with brake cooling ducts, blocking them will allow the pads and rotors to warm up quicker and speed up the bedding process.
- Temperature indicating paint on the rotor and pad edges can provide valuable data regarding observed temperatures during the bedding process and subsequent on-track sessions. This information can be highly beneficial when evaluating pad compounds and cooling efficiencies.

POST-BEDDING INSPECTION – ALL VEHICLES

- After the bedding cycle, the rotors should exhibit a uniformly burnished finish across the entire contact face. Any surface irregularities that appear as smearing or splotching on the rotor faces can be an indication that the brakes were brought up to temperature too quickly during the bedding cycle. If the smear doesn't blend away after the next run-in cycle, or if chatter under braking results, sanding or resurfacing the rotors will be required to restore a uniform surface for pad contact.

PRE-RACE WARM UP

- Always make every effort to get heat into the brakes prior to each event. Use an on-and-off the pedal practice to warm the brakes during the trip to the staging zone, during parade laps before the flag drops, and every other opportunity in an effort to build heat in the pads and rotors. This will help to ensure best consistency, performance, and durability from your brakes.

DYNO BEDDED COMPETITION PADS AND ROTORS

- Getting track time for a proper pad and rotor bedding session can be difficult. Wilwood offers factory dyno-bedded pads and rotors on many of our popular competition pads and ***Spec 37*** GT series rotors. Dyno-bedded parts are ready to race on their first warm up cycle. This can save valuable time and effort when on-track time is either too valuable or not available at all, Dyno-bedding assures that your pads and rotors have been properly run-in and are ready to go. Contact your dealer or the factory for more information on Wilwood Dyno-Bedding services.

NOTE: *NEVER allow the contact surfaces of the pads or rotors to be contaminated with brake fluid. Always use a catch bottle with a hose to prevent fluid spill during all brake bleeding procedures.*

Connect with Wilwood

Wilwood Facebook Wilwood Instagram Wilwood Twitter Wilwood YouTube