ASSEMBLY INSTRUCTIONS

FOR

1988 - 1998 CHEVY C1500 WITH STEEL REACT SPINDLE & 5 ON 5.00” LUG PATTERN

***For additional vehicle compatibility, visit www.wilwood.com**

FORGED XRS6R FRONT BRAKE KIT WITH 13.06” DIAMETER VENTED ROTORS (WITH OPTIONAL ABS)

BASE PART NUMBER

140-18602

DISC BRAKES SHOULD ONLY BE INSTALLED BY SOMEONE EXPERIENCED AND COMPETENT IN THE INSTALLATION AND MAINTENANCE OF DISC BRAKES

READ ALL WARNINGS

WARNING

IT IS THE RESPONSIBILITY OF THE PERSON INSTALLING ANY BRAKE COMPONENT OR KIT TO DETERMINE THE SUITABILITY OF THE COMPONENT OR KIT FOR THAT PARTICULAR APPLICATION. IF YOU ARE NOT SURE HOW TO SAFELY USE THIS BRAKE COMPONENT OR KIT, YOU SHOULD NOT INSTALL OR USE IT. DO NOT ASSUME ANYTHING. IMPROPERLY INSTALLED OR MAINTAINED BRAKES ARE DANGEROUS. IF YOU ARE NOT SURE, GET HELP OR RETURN THE PRODUCT. YOU MAY OBTAIN ADDITIONAL INFORMATION AND TECHNICAL SUPPORT BY CALLING WILWOOD AT (805) 388-1188, OR VISIT OUR WEB SITE AT WWW.WILWOOD.COM. USE OF WILWOOD TECHNICAL SUPPORT DOES NOT GUARANTEE PROPER INSTALLATION. **YOU**, OR THE PERSON WHO DOES THE INSTALLATION MUST KNOW HOW TO PROPERLY USE THIS PRODUCT. IT IS NOT POSSIBLE OVER THE PHONE TO UNDERSTAND OR FORESEE ALL THE ISSUES THAT MIGHT ARISE IN YOUR INSTALLATION.

RACING EQUIPMENT AND BRAKES MUST BE MAINTAINED AND SHOULD BE CHECKED REGULARLY FOR FATIGUE, DAMAGE, AND WEAR.

Need Additional Information? Use Your SmartPhone and Jump to Our Technical Tips Section on Our Web Site.

DISC BRAKES wilwood

WARNING

DO NOT OPERATE ANY VEHICLE ON UNTESTED BRAKES!

SEE MINIMUM TEST PROCEDURE WITHIN

ALWAYS UTILIZE SAFETY RESTRAINT SYSTEMS AND ALL OTHER AVAILABLE SAFETY EQUIPMENT WHILE OPERATING THE VEHICLE

IMPORTANT • READ THE DISCLAIMER OF WARRANTY INCLUDED IN THE KIT

NOTE: Some cleaners may stain or remove the finish on brake system components. Test the cleaner on a hidden portion of the component before general use.

WHEEL CLEARANCE DIAGRAM

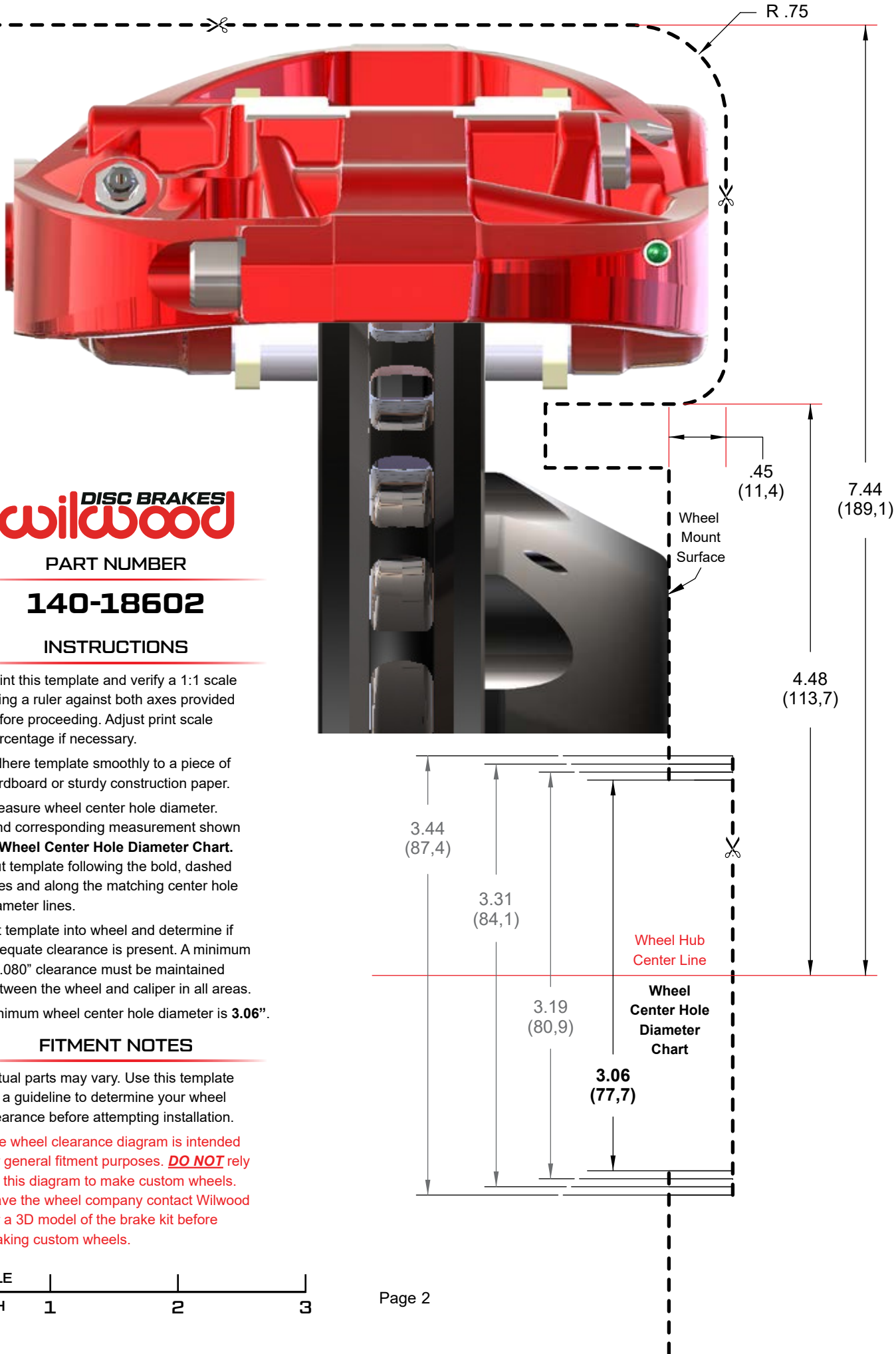

DISC BRAKES wilwood

PART NUMBER

140-18602

INSTRUCTIONS

1. Print this template and verify a 1:1 scale using a ruler against both axes provided before proceeding. Adjust print scale percentage if necessary.
2. Adhere template smoothly to a piece of cardboard or sturdy construction paper.
3. Measure wheel center hole diameter. Find corresponding measurement shown in **Wheel Center Hole Diameter Chart.** Cut template following the bold, dashed lines and along the matching center hole diameter lines.
4. Fit template into wheel and determine if adequate clearance is present. A minimum of .080" clearance must be maintained between the wheel and caliper in all areas.
5. Minimum wheel center hole diameter is **3.06"**.

FITMENT NOTES

- Actual parts may vary. Use this template as a guideline to determine your wheel clearance before attempting installation.
- The wheel clearance diagram is intended for general fitment purposes. ***DO NOT*** rely on this diagram to make custom wheels. Have the wheel company contact Wilwood for a 3D model of the brake kit before making custom wheels.

SCALE

INCH 1 2 3

Exploded Assembly Diagram

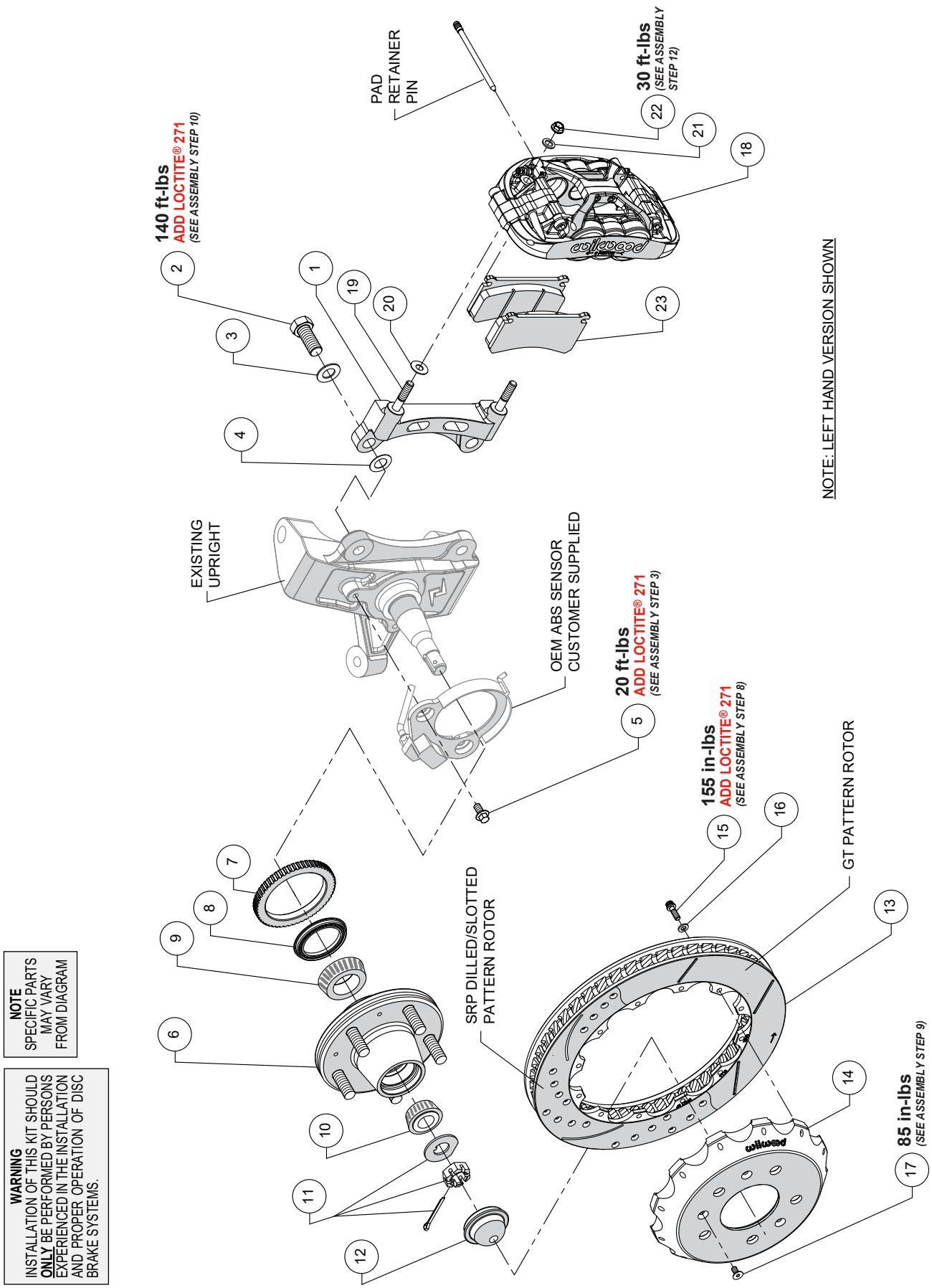

NOTE
SPECIFIC PARTS MAY VARY FROM DIAGRAM

WARNING
INSTALLATION OF THIS KIT SHOULD **ONLY** BE PERFORMED BY PERSONS EXPERIENCED IN THE INSTALLATION AND PROPER OPERATION OF DISC BRAKE SYSTEMS.

Figure 1. Typical Installation Configuration

Important Notice - Read This First

Before any tear-down or disassembly begins, review the following information:

- **NOTICE: Modification to the steering stop is required to fit this brake kit. See modification instructions on page 5.**
- **Review the wheel clearance diagram on page 2 to verify that there is adequate clearance with the wheels you will be using with the installation.**
- **This brake kit does not include flex lines. OEM brake lines will not adapt to Wilwood calipers. Check the assembly instructions, or associated components section for brake line recommendations before assembly. In addition, Wilwood offers an extensive listing of brake lines and fittings on our web site: www.wilwood.com.**
- **Due to OEM production differences and other variations from vehicle to vehicle, the fastener hardware and other components in this kit may not be suitable for a specific application or vehicle.**
- **It is the responsibility of the purchaser and installer of this kit to verify suitability / fitment of all components and ensure all fasteners and hardware achieve complete and proper engagement. Improper or inadequate engagement can lead to component failure.**

Photographic Tip

Important and highly recommended: Take photos of brake system before disassembly and during the disassembly process. In the event, trouble-shooting photos can be life savers. Many vehicles have undocumented variations, photos will make it much simpler for Wilwood to assist you if you have a problem.

Parts List

ITEM NO.	PART NO.	DESCRIPTION	QTY
1	250-18593	Bracket, Caliper Mounting	2
2	230-14217	Bolt, 5/8-18 x 1.50” Long, Hex Head	4
3	240-11856	Washer, .640” I.D. x 1.188” O.D. x .063” Thick	4
4	240-9074	Shim, .024” Thick	16
5	230-15934	Bolt, M8-1.25 x 16mm Long, Flanged Hex Head	4
6	270-18596	Hub, 5 on 5.00”	2
7	300-15793	Ring, ABS	2
8	380-10792	Seal, Grease	2
9	370-2609	Cone, Inner Bearing	2
10	370-9542	Cone, Outer Bearing	2
11	370-18599X	Nut, Washer M20-1.25”, Cotter Pin, Spindle”	2
12	270-16184	Cap, Dust	2
13	160-8165/66-GTB	Rotor, GT, 1.25” x 13.06” Diameter, 12 x 8.75” Bolt Circle	2
13A	160-7798/99-BK	Rotor, Black, SRP Drilled and Slotted (one each, right and left)	2
14	170-18565	Hat, 5 x 5.00”, 1.23” Offset, 12 x 8.75” Bolt Circle	2
15	230-8037	Bolt, 1/4-20 x .75” Long, Torx, 12 Point	12
16	240-11240	Washer, .265” I.D. x .500” O.D. x .063” Thick	12
17	230-10419	Bolt, 1/4-20 x .50” Long, Flat Head	6
18	120-17219/20-BK	Caliper, XRSR6R, Black (one each, right and left)	2
18A	120-17219/20-RD	Caliper, XRSR6R, Red (one each, right and left)	2
19	230-9078	Stud, 3/8-16 x 3/8-24 x 2.50” (pre-installed in bracket)	4
20	240-1159	Shim, .035” Thick	16
21	240-10190	Washer, .391” I.D. x .625” O.D. x .063” Thick	4
22	230-16550	Nut, 3/8-24, Self-Locking, 6-Point Head	4
23	150-20-10416K	Pad, BP-20 Compound, Axle Set	1

NOTES: Part Number 230-18598 Bracket Bolt Kit includes part numbers 230-14217, 240,9074, and 240-11856
Part Number 230-8008 Rotor/Hat Bolt Kit includes part numbers 230-8037 and 240-11240
Part Number 230-7032 Hub/Hat Bolt Kit includes part number 230-10419
Part Number 230-15935 Bolt Kit, ABS Sensor, includes part number 230-15934
Part Number 250-18594 Caliper Bracket Kit, includes part numbers 230-9078, 230-16550, 240-1159, 240-10190, and 250-18593
Part Number 370-18601-2 Lock Nut Kit, includes part numbers 270-16184, 370-2609, 370-9542, 370-18599X and 380-10792
Item 13A is an optional item and included with the “-D” drilled rotor kits. Add”-D” to end of part number when ordering.
Item 18A is an optional item and included with the “-R” red caliper kits. Add”-R” to end of part number when ordering.

General Information

*Installation of this kit should **ONLY** be performed by persons experienced in the installation and proper operation of disc brake systems. Before assembling the Wilwood disc brake kit, double check the following items to ensure a trouble-free installation.*

•Make sure this is the correct kit to fit the exact make and model year of your axle. This kit is designed specifically to fit Wilwood Chevrolet 1988-1998 C1500 React Spindle.

•Inspect the package contents against the parts list to ensure that all components and hardware are included.

•Verify the hub stud pattern in this kit 5 on 5.00”, matches the lug pattern of the vehicles wheels.

•Verify your wheel clearance using page 2.

Disassembly Instructions

•Disassemble the original equipment front brakes:

Raise the front wheels off the ground and support the front suspension according to the vehicle manufacturer’s instructions.

Remove the front wheels, calipers, and rotors.

Modification Instructions

Trim the OEM ABS sensor along the dotted line shown to enlarge the center opening (approximately Ø3.25). This modification allows the bracket to sit flush against the spindle and ensures proper installation of the kit. Refer to the before and after images.

•Install new React Spindle per OEM instructions. New ball joints are recommended.

•Check the lower control arm to assure sufficient clearance with the new rotor when the steering is turned lock-to-lock. If necessary, grind the edge of the lower control arm around the ball joint, Photo 1. ***NOTE: Final clearance must be checked at ride height with the wheels on the ground and turning lock-to-lock.***

•Remove roughly 0.25” of material from the top of the stamped steering stop on the control arm, as shown in Photo 2, to clear the caliper bracket bolt. ***NOTE: Check final clearance at ride height and turning lock-to-lock.***

Before

After

Photo 1

Photo 2

Assembly Instructions

NOTE: Numbers in parenthesis refer to the parts list and Figure 1 on the preceding pages.

STEP 1 ***For vehicles equipped with ABS***, carefully press the ABS ring (7) onto the backside of the hub (6) as shown on Figure 1 and photo 3.

STEP 2 ***For vehicles equipped with ABS,*** install the modified OEM ABS sensor (customer supplied) to the spindle using bolts (5) as shown in Figure 1, Photos 4 and 5. Temporarily tighten the mounting bolts (5) to where the ABS sensor can move around slightly. ***Note:*** *the sensor must fit squarely against mount bosses on the spindle.*

Photo 3

Photo 4

Assembly Instructions (Continued)

Temporarily insert the inner bearing (9), hub (6), outer bearing (10), spindle washer, spindle nut (11) onto spindle. Check to make sure ABS sensor is centered on hub & ABS ring. Lightly tap ABS sensor until centering to hub ABS ring is achieved. Inspect for interference from hub ABS ring, casting irregularities machine ridges, burrs, etc. Once centering of the ABS sensor is achieved, remove the hub and bearings, then remove ABS sensor bolts (5) one at a time and apply red Loctite 271 to the threads, and torque to value shown in Figure 1.

STEP 3 The caliper mount bracket (1) should initially be installed with clean, dry threads on the mounting bolts. Orient the bracket, as shown in Figure 1 and Photo 6, and install using bolts (2) and washers (3). Initially place one .024" thick shim (4) on each bolt between the bracket and spindle, Figure 1. Temporarily tighten the mounting bolts. ***NOTE:*** *The bracket must fit squarely against the mount bosses on the spindle.* Inspect for interference from casting irregularities, machining ridges, burrs, etc. Later, after the caliper alignment has been checked, the mount bolts will be secured using red *Loctite*® 271.

STEP 4 Pack the large inner bearing cone (9) with high temperature disc brake bearing grease (available from your local auto parts store) and install into the backside of the hub (6).

STEP 5 Install the grease seal (8) by pressing into the backside of the hub (6), flush with the end of the hub, Photo 7.

STEP 6 Pack the small outer bearing cone (10) with high temperature disc brake bearing grease and install into hub (6). Slide the hub assembly onto the spindle. Secure using spindle washer (11) and spindle nut (11), Photo 8. Adjust bearings per OEM specifications. Install a new cotter pin (11).

STEP 7 Press the dust cap (12) into the hub (6). ***NOTE:*** *Do not hammer center of cap. Install using outer flange only.*

STEP 8 Orient the rotor (13) and the hat (14) as shown in Figure 1 and Photo 9. Attach rotor to hat using bolts (15) and washers (16). Apply red *Loctite*® 271 to the bolt threads and torque to value shown in Figure 1 using a criss-cross pattern. For an added measure of security, the bolts may be safety wired using standard 0.032 inch diameter stainless steel safety wire as shown in Figure 4. Please refer to Wilwood's data sheet DS-386 (available at www.wilwood.com/Pdf/DataSheets/ds386.pdf) for complete safety wire installation instructions.

STEP 9 Slide the hat/rotor assembly onto the axle hub, Photo 10. ***NOTE:*** *The hat must fit flush against the axle hub flange or excessive rotor run out may result.* Install three flat head screws (17) to keep the hat/rotor assembly in place while continuing with the installation, and torque to value shown in Figure 1.

STEP 10 ***NOTE:*** *This kit contains distinct right and left hand calipers that must be mounted in a specific direction, as described below.* Initially place one .035" thick shim (20) on each stud (19) between the caliper and the bracket, as shown in Figure 1

Photo 5

Photo 6

Photo 7

Photo 8

Photo 9

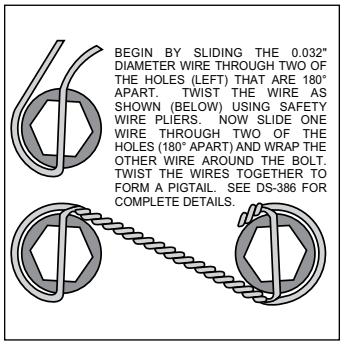

Figure 2. Safety Wire Diagram

Photo 10

Photo 11

and Photo 11. Mount the caliper (18) onto the bracket (1) using washers (21) and lock nuts (22), Figure 1. Temporarily tighten the lock nuts. Ensure that the caliper is mounted so the largest pistons are at the rotor exit end of the caliper, in relation to the direction of the rotor. View the rotor through the top opening of the caliper. The rotor should be centered in the caliper, Photo 12. If not, adjust by adding or subtracting shims (4) between the bracket and the upright. Always use the same amount of shims on each of the two mounting bolts. Once the caliper alignment is correct, remove the bracket mounting bolts (2) one at a time, apply red *Loctite*® 271 to the threads, and torque to value shown in Figure 1.

STEP 11 Remove the caliper, then remove the two pad retaining pins from the caliper. Insert the brake pads (23) into the caliper from the bottom, with the friction material facing the rotor, as shown in Photo 13. Secure the brake pads in place with the pad retaining pins, Figure 1 and Photo 14. ***CAUTION:*** *Ensure pad retaining pins are completely engaged into caliper.* It is recommended to use a small flat punch and hammer to tap the pins in until they are fully seated.

STEP 12 Reinstall the caliper and temporarily tighten the lock nuts. Check that the top of the brake pad is flush with the outside diameter of the rotor, Photo 15. If not, adjust by adding or subtracting shims (20) between the caliper and the bracket. After the caliper pad height is set, torque the caliper lock nuts (22) to value shown in Figure 1.

STEP 13 Temporarily install wheel and torque lug nuts to manufacturer's specification. Ensure that the wheel rotates freely without any interference.

STEP 14 Attach brake line to caliper. ***NOTE****: OEM rubber brake hoses generally cannot be adapted to Wilwood calipers.* Wilwood offers a brake flexline hose kit to fit this application (sold separately), order P/N 220-16439. Hose kit includes hoses, fittings, etc., all in one package for this application. The caliper inlet fitting is a 1/8-27 NPT (use PTFE tape on pipe threads of adapter fitting for proper sealing to caliper). **Ensure hoses are routed to prevent contact with moving suspension, brake or wheel components.**

For left side, install new chassis fitting bracket as shown in Photo 16, using OEM bracket bolt.

For both sides, route hose as shown in Photo 17 and install new hose clamp to upper control arm using OEM flat spacer, bolt, and nut.

Carefully zip tie the ABS wire (if applicable) to the brake hose to keep it away from moving suspension or rotating wheel components.

- ***NOTE:*** *Wilwood hose kits are designed for use in many different vehicle applications and it is the installer's responsibility to properly route and provide adequate clearance and retention for brake hose components.*

- ***NOTE:*** *Specified brake hose kits may not work with all Years,*

Photo 12

Photo 13

Photo 14

Photo 15

Photo 16

Photo 17

Assembled Brake Kit

Assembly Instructions (Continued)

Makes and Models of vehicle that this brake kit is applicable to, due to possible OEM manufacturing changes during a production vehicle's life.

•***CAUTION:*** *In absence of specific instructions for brake line routing, the installer must use his best professional judgment on correct routing and retention of lines to ensure safe operation.* It is the installer's responsibility to ensure that all fittings and hoses are the correct size and length, properly seal, and that they will not be subject to crimping, strain and abrasion from vibration or interference with suspension components, brake rotor or wheel.

STEP 15 Bleed the brake system, referring to the '**Additional Information and Recommendations**' below for proper bleeding instructions. Check system for leaks after bleeding.

STEP 16 Install the wheel and torque the lug nuts to manufacturer's specifications.

•***CAUTION:*** *Test vehicle brake system per the* ***'Minimum Test Procedure'*** *stated within this document before driving.* After road testing, inspect for leaks and interference. Initially after install and testing, perform frequent checks of the vehicle brake system and lines before driving, to confirm that there is no undue wear or interference not apparent from the initial test. Afterwards, perform periodic inspections for function, leaks and wear in an interval relative to the usage of vehicle.

STEP 17 Bed-in the brake pads per the procedure on page 9.

Additional Information and Recommendations

•Fill and bleed the new system with Wilwood Hi-Temp° 570 grade fluid or higher. For severe braking or sustained high heat operation, use Wilwood EXP 600 Plus Racing Brake Fluid. Used fluid must be completely flushed from the system to prevent contamination. ***NOTE:*** *Silicone DOT 5 brake fluid is* ***NOT*** *recommended for racing or performance driving*.

•To properly bleed the brake system, begin with the caliper farthest from the master cylinder. Bleed the outboard bleed screw first, then the inboard. Repeat the procedure until all calipers in the system are bled, ending with the caliper closest to the master cylinder. ***NOTE:*** *When using a new master cylinder, it is important to bench bleed the master cylinder first.*

•Test the brake pedal. It should be firm, not spongy and stop at least 1 inch from the floor under heavy load.

If the brake pedal is spongy, bleed the system again.

If the brake pedal is initially firm, but then sinks to the floor, check the system for fluid leaks. Correct the leaks (if applicable) and then bleed the system again.

If the brake pedal goes to the floor and continued bleeding of the system does not correct the problem, a master cylinder with increased capacity (larger bore diameter) may be required. Wilwood offers various lightweight master cylinders with large fluid displacement capacities.

•***NOTE:*** *With the installation of after market disc brakes, the wheel track may change depending on the application.* Check your wheel offset before final assembly.

•If after following the instructions, you still have difficulty in assembling or bleeding your Wilwood disc brakes, consult your local chassis builder, or retailer where the kit was purchased for further assistance. Additional information is also available on our web site at www.wilwood.com, or e-mail technical assistance: info@wilwood.com.

Brake Testing

WARNING • DO NOT DRIVE ON UNTESTED BRAKES
BRAKES MUST BE TESTED AFTER INSTALLATION OR MAINTENANCE
MINIMUM TEST PROCEDURE

- Make sure pedal is firm: Hold firm pressure on pedal for several minutes, it should remain in position without sinking. If pedal sinks toward floor, check system for fluid leaks. DO NOT drive vehicle if pedal does not stay firm or can be pushed to the floor with normal pressure.
- At very low speed (2-5 mph) apply brakes hard several times while turning steering from full left to full right, repeat several times. Remove the wheels and check that components are not touching, rubbing, or leaking.
- Carefully examine all brake components, brake lines, and fittings for leaks and interference.
- Make sure there is no interference with wheels or suspension components.
- Drive vehicle at low speed (15-20 mph) making moderate and hard stops. Brakes should feel normal and positive. Again check for leaks and interference.
- Always test vehicle in a safe place where there is no danger to (or from) other people or vehicles.
- Always wear seat belts and make use of all safety equipment.

Pad and Rotor Bedding

BEDDING STEPS FOR NEW PADS AND ROTORS – ALL COMPOUNDS

Once the brake system has been tested and determined safe to operate the vehicle, follow these steps for the bedding of all new pad materials and rotors. These procedures should only be performed on a race track, or other safe location where you can safely and legally obtain speeds up to 65 MPH, while also being able to rapidly decelerate.

- Begin with a series of light decelerations to gradually build some heat in the brakes. Use an on-and-off the pedal technique by applying the brakes for 3-5 seconds, and then allow them to fully release for a period roughly twice as long as the deceleration cycle. If you use a 5 count during the deceleration interval, use a 10 count during the release to allow the heat to sink into the pads and rotors.
- After several cycles of light stops to begin warming the brakes, proceed with a series of medium to firm deceleration stops to continue raising the temperature level in the brakes.
- Finish the bedding cycle with a series of 8-10 hard decelerations from 55-65 MPH down to 25 MPH while allowing a proportionate release and heat-sinking interval between each stop. The pads should now be providing positive and consistent response.
- If any amount of brake fade is observed during the bed-in cycle, immediately begin the cool down cycle.
- Drive at a moderate cruising speed, with the least amount of brake contact possible, until most of the heat has dissipated from the brakes. Avoid sitting stopped with the brake pedal depressed to hold the car in place during this time. Park the vehicle and allow the brakes to cool to ambient air temperature.

COMPETITION VEHICLES

- If your race car is equipped with brake cooling ducts, blocking them will allow the pads and rotors to warm up quicker and speed up the bedding process.
- Temperature indicating paint on the rotor and pad edges can provide valuable data regarding observed temperatures during the bedding process and subsequent on-track sessions. This information can be highly beneficial when evaluating pad compounds and cooling efficiencies.

POST-BEDDING INSPECTION – ALL VEHICLES

- After the bedding cycle, the rotors should exhibit a uniformly burnished finish across the entire contact face. Any surface irregularities that appear as smearing or splotching on the rotor faces can be an indication that the brakes were brought up to temperature too quickly during the bedding cycle. If the smear doesn't blend away after the next run-in cycle, or if chatter under braking results, sanding or resurfacing the rotors will be required to restore a uniform surface for pad contact.

Pad and Rotor Bedding

PRE-RACE WARM UP

- Always make every effort to get heat into the brakes prior to each event. Use an on-and-off the pedal practice to warm the brakes during the trip to the staging zone, during parade laps before the flag drops, and every other opportunity in an effort to build heat in the pads and rotors. This will help to ensure best consistency, performance, and durability from your brakes.

DYNO BEDDED COMPETITION PADS AND ROTORS

- Getting track time for a proper pad and rotor bedding session can be difficult. Wilwood offers factory dyno-bedded pads and rotors on many of our popular competition pads and ***Spec 37*** GT series rotors. Dyno-bedded parts are ready to race on their first warm up cycle. This can save valuable time and effort when on-track time is either too valuable or not available at all, Dyno-bedding assures that your pads and rotors have been properly run-in and are ready to go. Contact your dealer or the factory for more information on Wilwood Dyno-Bedding services.

NOTE: *NEVER allow the contact surfaces of the pads or rotors to be contaminated with brake fluid. Always use a catch bottle with a hose to prevent fluid spill during all brake bleeding procedures.*

Connect with Wilwood

Wilwood Facebook Wilwood Instagram Wilwood Twitter Wilwood YouTube